TECHNICAL MEMORANDUMS

NATIONAL ADVISORY COMMITTEE FOR AERONAUTICS

No. 1012

RECENT RESULTS IN ROCKET FLIGHT TECHNIQUE

By Eugen Sänger

Flug
Sonderheft 1, December 1934

Washington
April 1942

NATIONAL ADVISORY COMMITTEE FOR AERONAUTICS

TECHNICAL MEMORANDUM NO. 1012

RECENT RESULTS IN ROCKET FLIGHT TECHNIQUE*

By Eugen Sänger

1. INTERIOR BALLISTICS OF THE ROCKET AIRCRAFT

The concept of the effective ejection velocity of a rocket engine is explained and the magnitude of the attainable ejection velocity theoretically and experimenrally investigated. Velocities above 3000 meters per second (6700 mph) are actually measured and the possibilities of further increases shown.

1. Notation

a velocity of sound in propulsion (m/s)

c ejection velocity (effective) of the propulsion gas (m/s)

c_m muzzle velocity of the propulsion gas (m/s)

c_{max} theoretical limiting value of the ejection velocity (m/s)

c_{mol} mean value of the translatory molecular velocity (m/s)

c_x flow velocity of the propulsion gas at any point of of the nozzle (m/s)

$_v$ specific heat at constant volume of the propulsion gas (cal/kg)

c_p specific heat at constant pressure of the propulsion gas (cal/kg)

d' diameter at throat of nozzle (m)

d_m diameter at mouth of nozzle (m)

---

*"Neuere Ergebnisse der Raketenflugtechnik." Flug, Sonderheft 1, Dec. 1934.

f number of degrees of freedom of a gas molecule

f_m nozzle area at mouth (m^2)

g acceleration of gravity (m/s^2)

m mass ($kg\ s^2/m$)

p pressure of the propulsion gas (kg/m^2)

p_m pressure of the propulsion gas at mouth of nozzle (kg/m^2)

p_a air pressure in vicinity of nozzle (kg/m^2)

t time (s)

v flight velocity (m/s)

A mechanical equivalent of heat (1/427 cal/kg)

J heat content of propulsion gas (cal/kg) or momentum (kgs)

J_o initial heat content of propulsion gas (cal/kg)

P rocket thrust (effective) (kg)

P' free rocket thrust (kg)

R gas constant (m/deg)

T absolute propulsion gas temperature (deg)

T_o absolute initial temperature of the propulsion gas (deg)

T_x absolute propulsion gas temperature at any point of the nozzle (deg)

T_m absolute temperature of propulsion gas at mouth of nozzle (deg)

U internal energy of the propulsion gas (cal/kg)

V specific volume of the propulsion gas (m^3/kg)

W air resistance (kg)

κ ratio of specific heats at constant pressure and constant volume

η_d nozzle efficiency $(c/c_{max})^2$

η_m utility coefficient (c/c_{max})

ρ_m density of propulsion gas at mouth (kgs^2/m^4)

2. General

The required propulsive force of airplanes is at present obtained exclusively by the reaction force of the air masses which are given a backward acceleration by the propeller (fig. 1). At high flight velocities approaching the velocity of sound this process encounters fundamental difficulties. These are assocated principally with the lowered efficiency of the propeller rotating at high speed, the high mechanical stresses of the propeller, and the greatly increased air forces and weights of the power plant associated with the high flight speed.

It has therefore been proposed to obtain the propulsive force as the reaction force of gas masses which, as in the case of rockets, are first compressed in a chamber and being ejected backward issue from the latter with high velocity under the action of the excess pressure (fig. 2). The excess pressure is generated by the combustion of fuels as with the conventional combustion engines. (The burnt fuel gases constitute the propulsion gas.)

The undesirably large air forces which increase with the velocity are decreased in part through shaping the aircraft to suit the peculiar characteristics of supersonic flow but mainly through the use of correspondingly high flight altitudes at which, because of the decreasing air density, the air forces are kept within desired limits in spite of the increased flight velocity.

The oxygen required for the combustion cannot be obtained practically from the rarified atmosphere at high altitude, but must be carried along in the airplane. In this way the power plant is at the same time relieved of the large work of compression required.

Comparison of figures 1 and 2 shows that the propulsive propeller jet is in the case of the rocket aircraft replaced by a propulsive fuel gas jet. Whereas, however, with propeller propulsion the process of the conversion of the latent energy of the fuel into the kinetic energy

of the propeller slipstream involves many losses leading to a complicated, sensitive, and heavy mechanism, the same transition from the heating value of the fuel to the kinetic energy of the burnt gas in the case of the rocket is direct and effective. The fuel and liquid oxygen are supplied by a pump directly into a high-pressure combustion chamber hwere they combine and flow out with extremely high velocity through a nozzle. The back pressure of this steady exhaust gas jet propels the aircraft without any additional means. In this manner the possibilities of disturbances are very much reduced, the motor efficiency becomes very high, and the structural weight per unit of output is extremely small.

The rocket motor occupies approximately a midposition between the conventional airplane engine which can deliver a few hundred horsepower for many days and a projectile which gives an output of many millions of horsepower over a fraction of a second. The rocket motor capable of flight will thus give, for example, an output of 100,000 horsepower over a period of 15 to 30 minutes and will weigh less than 1 gram per horsepower. As in the case of the gun projectile it is provided with the required oxygen and is thus independent of the flight altitude.

The supply of the required quantities of oxygen to the combustion chamber from the free atmosphere at very high altitudes against pressures of probably 100 atmospheres and in the short time intervals available is a problem quite unsolvable structurally. Hence the compression to the highest possible degree, namely, to the liquid form, must be carried out on the ground and the liquid oxygen taken along on the aircraft. The carrying along of large quantities on board the aircraft, together with the very large fuel consumption, say, of a 100,000-horsepower motor requires that the extremely large propulsion forces of the rocket fuel supply is soon exhausted.

The structural difficulties in the manufacture of rocket motors resemble to some extent those of the gas turbine. Although no moving parts in the fuel jet are encountered and the efficiency relations are entirely different, the fact that the cooling of the walls of the combustion chamber of the rocket motor can be much less energetic than in the case of the airplane engine is a structurally unfavorable circumstance to be taken into account. At the higher flight speeds the heating due to dynamic pressure and friction of the air streaming past the air-

craft — at small altitudes about $\Delta T = v^2/2000^\circ$ C)* — makes return cooling impossible, so that only the fuel itself can be used for cooling the walls of the combustion chamber. The heat capacity of the fuel permits, however, a heat conduction to the cooling medium of at most about 6 percent of the heating value as compared with 20 to 30 percent for the conventional airplane engine. There is furthermore to be considered the extremely high propulsion gas temperature in the combustion, for example, of fuel with pure oxygen without inert gases. On the other hand, the rocket motor permits much greater freedom in the choice of structural material so that its construction is fundamentally possible.

3. Consequences of the Principle of Conservation of Momentum

The outside surface of the rocket aircraft is acted upon by air pressures the distribution of which depends upon the state of motion of the airplane and in every case they give a component, namely, a drag W, directed opposite to the line of flight. The gas pressures over the entire surface of the rocket combustion chamber give a total force in the direction of motion of the aircraft, namely, a rocket thrust P. Neglecting all other forces, if the forces W and P are equal, the aircraft will be be in a steady state of motion: if they are unequal the aircraft will be accelerated or retarded.

The determination of the air pressure distribution over the aircraft is a problem of the aerodynamics of the rocket airplane. The determination of the combustion gas pressures in the rocket combustion chamber is a problem of the interior ballistics of the rocket airplane and the subject of our present considerations.

The resultant of the combustion gas pressures in the direction of the axis of the rocket can be obtained in the most simple way with the aid of the principle of momentum. It is assumed that the flow of the jet is steady so that the rocket is propelled at constant pressure. Furthermore, in the investigation of the gas flow in the nozzle the acceleration of the airplane is neglected as compared with that of the gases. There is also neglected the momentum of the fresh fuel entering the combustion chamber and the combustion gas mass is surrounded by a "control surface" as customary in flow dynamics. This surface is shown dotted in figure 5.

---

*See pp. 139 and 142 of reference 1.

The rate of change of the momentum must be equal to the forces acting on the bounded combustion gas mass. This change with time occurs only through the part of the control surface f_m, the area of the mouth of the nozzle

$$dJ/dt = c_m \, dm/dt$$

The sum of all the pressures of the combustion gases on the walls is denoted by

$$P = \int p df$$

For reasons of symmetry its line of action coincides with that of the rocket axis opposite to the flight direction.

Furthermore, the bounded gas mass is acted upon by the external force $p_m f_m$. Hence

$$c_m \, dm/dt = P - p_m f_m$$

and

$$P = c_m \, dm/dt + p_m f_m \tag{1}$$

The effective thrust P of the rocket — that is, the resultant of the gas pressures on the combustion chamber walls — is therefore equal to the momentum of the accelerated gas flow through the nozzle mouth increased by the product of the mouth area by the pressure of the combustion gases. The same rule can also be derived by assuming a definite flow through the nozzle (for example, liquid flow, adiabatic gas flow, isothermal flow, etc.) and integrating the pressures on the wall, as was done for adiabatic flow, for example, by Esnault-Pelterie (reference 2).

The pressures of the combustion gases on the walls of the combustion chamber are therefore the equivalent of an effective momentum of the rapidly escaping mass m of exhaust gases which is greater than the momentum at the nozzle mouth and corresponds to the effective thrust:

$$P = c \, dm/dt \tag{2}$$

where the "effective ejection velocity" c is greater than the muzzle velocity of the propulsion gases in the nozzle

$$c = P \, dt/dm = c_m + p_m f_m \, dt/dm \tag{3}$$

The velocity c is the most important magnitude of the interior ballistics of the rocket airplane and fundamental for all performance considerations of rockets and rocket airplane motors. In contrast to the internal efficiency it represents an absolute coefficient since it does not refer to a definite fuel. It connects the interior and exterior ballistics of rocket flight in that it is the end result and object of all interior ballistics processes and lies at the basis of the exterior ballistics processes.

According to the investigations of the author the realization of stratosphere communication with rocket aircraft over the oceans is technically feasible on attaining an ejection velocity of 3700 meters per second (8250 mph).

According to the well-known German ballistics authority, Professor Cranz, with an ejection velocity of 4000 meters per second (8950 mph) the shooting of a crewless rocket to the moon is within the range of technical possibility (reference 3). The effective ejection velocity thus lies at the basis of the interior ballistics investigations presented here.

According to the foregoing relation, the effective ejection velocity c depdends only on the relations in the rocket but not on the conditions of the surrounding atmosphere or on the conditions of motion of the rocket. This fact also follows directly from the fundamental properties of the supersonic flow — the only flow of significance in the rocket nozzle — according to which the pressure distribution in the nozzle is entirely independent of the downstream relations outside the nozzle. The effective ejection velocity is equivalent to only this pressure distribution.

The question now arises whether the effective ejection velocity c, which is practically always greater than any actually occurring flow velocity in the nozzle, is to be considered as a true gas velocity or simply as a purely computational magnitude. While the processes up to the mouth of the nozzle, as previously mentioned, are entirely independent of the external pressure, the flow processes outside of the nozzle depend very much on the external pressure. If the external pressure p_a is equal to the pressure at the mouth p_m, the flow velocity of the combustion gases outside of the nozzle does not increase beyond the muzzle velocity c_m, the effective

velocity c actually nowhere occurs as a true velocity. If p_a is smaller than the muzzle pressure p_m, the escaping jet diverges under a certain angle and the flow velocities of the gas masses become greater than c_m, these large velocities being no longer directed parallel. Finally, if the external pressure is equal to zero the flow velocity of the completely scattered jet is equal to the limiting value c_{max} given by the complete conversion of the heat content into the kinetic energy of directed flow. The flow velocity c_{max} is then greater than c.

From the above it is to be concluded that for a quite definite external pressure a true gas flow velocity of the magnitude c can arise which generally has nothing to do with the actual gas velocity. Since the effective ejection velocity c does not depend on the relations outside the nozzle, the true gas velocities outside the nozzle may, depending on the external pressure, be smaller, equal to, or greater than the effective velocity. The cooling and expansion of the combustion gases outside the mouth of the nozzle is therefore of no effect on the effective rocket thrust.

A certain exception to this law occurs if the muzzle pressure p_m is considerably higher than the external pressure p_a so that the escaping gases strongly diverge, as in the case of firearms, and gather at the forward side of the nozzle. In this manner there arises under certain conditions an appreciable additional thrust on this forward area of the nozzle. This fact also contributes to an explanation of the relatively favorable efficiency of nozzles with small divergences.

In what follows in speaking of the ejection velocity the effective velocity c explained above will be meant.

The effective thrust $P = c\ dm/dt$ of the rocket is always partially counteracted by the pressures of the external air. In steady flight of the rocket airplane the air resistance W is exactly equal to the thrust P.

In accelerated flight or at standstill only a part of the thrust is balanced by the air pressures while the remainder as "free thrust" is available for accelerating the airplane or as a measurable force at standstill. The thrust P' measured at standstill of a rocket is therefore always smaller than its effective thrust P by the product of the pressure of the air at rest and the effective mouth area f_m of the nozzle:

$$P' = P - p_a f_m = c\ dm/dt - p_a f_m = c_m\ dm/dt + f_m(p_m - p_a) \qquad (4)$$

The effective thrust thus obtained from the measured free thrust is therefore

$$P = P' + p_a\ f_m \qquad (5)$$

and the effective velocity is similarly obtained from the free thrust as

$$c = P\ dt/dm = P'\ dt/dm + p_a f_m\ dt/dm \qquad (6)$$

If the gas in the mouth of the nozzle expands up to the external air pressure then the measured thrust is equal to the change of momentum of the combustion gases in the nozzle mouth

$$P' = c_m\ dm/dt$$

or

$$c = c_m + p_a f_m\ dt/dm \qquad (7)$$

If the divergence of the nozzle is so large that expansion can take place below the external air pressure, the flow of the combustion gases separates from the nozzle wall approximately on attaining the external air pressure, that is, in the effective nozzle mouth cross section. Up to this point the nozzle behaves like one with proper divergence. After the separation oscillation phenomena arise in the separated gas flow that lead to losses.

If the expansion is not down to the external air pressure, a part of the otherwise useful heat content of the combustion gas is lost without production of thrust since with increasing expansion of the gases in the nozzle the momentum increases more rapidly than the product of the mouth pressure by the mouth area decreases.

If in the neighborhood of the rocket at rest or in motion with subsonic speed the air is carried along by mixing with the escaping exhaust gases, this acceleration of the surrounding air produces a decrease in the pressure with which may be associated a change of the free thrust P', but not of the effective thrust:

$$P' = c\ dm/dt - p_a\ f_m$$

For the rocket moving with supersonic velocity, this effect on the thrust of the gases already ejected is no longer possible because of the properties of the supersonic flow.

If a given rocket is driven steadily in an outer atmosphere of a density varying with time, the effective thrust is naturally constant while the free thrust varies with the density of the surrounding atmosphere, increasing with the lowering of the outside pressure, as is seen from the above equation.

The above examples show that the introduction of the concept of "effective thrust" is necessary for the clear discussion of the propulsive force and air resistance. It is to be remarked, however, that with this method of treatment an air resistance must be ascribed even to the airplane at rest with engine running, the resistance being equal to the product of the pressure of the external air at rest by the effective area of the nozzle mouth.

4. Limits of the Ejection Velocity

As has already been shown, the ejection velocity is the factor of chief importance for the performance of a rocket motor. The maximum possible directed flow velocity of a gas is obtained at complete cooling and expansion of the latter from the energy equation for known initial heat content:

$$c_{max} = \sqrt{2g\ J_o/A} \tag{8}$$

Assuming, for example, the heat content of the combustion products of a gas oil - oxygen fuel equal to about 1.05×10^6 kgm/kg, a limiting value of the ejection velocity for these gases of $c_{max} = 4570$ m/s (10,000 mph) would be obtained. There are known to exist, however, technically controllable chemical reactions of energy concentrations that correspond to a value of c_{max} up to about 7000 m/s (15,600 mph) irrespective of the reactions of atomic hydrogen which are as yet not evaluated. These figures so far exceed the usual values for the velocities of motion and even the velocity of heat motion of the gas molecules that it is not out of place here to give an explanation based on gas kinetics theory.

According to Boltzmann there is associated with each degree of freedom of the molecular motion of a kilogram of ideal gas kinetic energy in cal of amount

$$B = 1/2\ ART \tag{9}$$

The total kinetic energy of the three degrees of freedom in translatory motion is therefore

$$E = 3\ B = 3/2\ ART \tag{10}$$

Gases of more than one atom possess in addition to the translatory also rotational degrees of freedom, for diatomic gases $f = 5$ and for gases with three or more atoms $f = 6$.

The internal energy of the gas, which includes the kinetic energies of all translations, rotations, and other degrees of freedom but not interatomic energy is

$$U = \int c_v\ dt = f/2\ ART \tag{11}$$

For a given state p,V every gas contains, in addition to the internal energy U the expansion energy $ApV = ART$ which, according to (9), corresponds to two further degrees of freedom, so that the heat content $J = U+ApV$ becomes

$$J = \int c_p\ dT = (f + 2)/2\ ART \tag{12}$$

The mean value of the translatory molecular velocity c_{mol} is obtained in the usual manner with the aid of equation (10):

$$c^2_{mol}/2g = E/A;\ c_{mol} = \sqrt{3gRT} \tag{13}$$

The limiting value of the directed flow velocity after complete expansion and cooling, $T \longrightarrow 0$ (the total heat content being converted into the energy of directed motion) is according to (8) and (12):

$$c^2_{max}/2g = J/A;\ c_{max} = \sqrt{(f + 2)gRT} \tag{14}$$

From the comparison of the factors 3 and $(f + 2)$ of the last two equations it is seen that for a flow into a vacuum:

1. The energies of all degrees of freedom above 3,

that is, the energies of rotation and other degrees of freedom, if there are such are also converted into the energy of directed velocity as may also be expected for the cooling of a gas, according to the Boltzmann law of equal partition of the energies.

2. The energy of expansion $ApV = ART = 2B$ is also converted into directed velocity as must likewise be expected in cooling the gas down to absolute zero temperature.

Setting, as usual, $\kappa = c_p/c_v = (f + 2)/f$ for the particular case of zero external pressure, equation (14) passes over into the familiar Zeuner formula:

$$c_{max} = \sqrt{2g\ J_0/A} = \sqrt{2\kappa/(\kappa - 1)\ gRT} \qquad (15)$$

where $\kappa = 5/3$ for monatomic, 7/5 for diatomic, and 8/6 for triatomic gases.

This limiting value of the ejection velocity $c_{max} = \sqrt{2\kappa/(\kappa - 1)\ gRT}$ of a rocket motor thus considerably exceeds both the velocity of sound $a = \sqrt{\kappa gRT}$ and the mean value of the translatory molecular velocity $c_{mol} = \sqrt{3gRT}$. This fact is practically also confirmed by the velocity measurements of gunpowder gases in escaping from the muzzle of heavy guns of small elevation where values of 2000 meters per second (4500 mph) were confirmed (reference 4) in the expanded gas, that is, outside the muzzle, and also more recently in the supersonic wind tunnels of various countries where, for air at normal temperature, the value $c_{max} = 765$ meters per second (1700 mph) is approached.

It is to be noted finally that in the theoretical limiting case of an expansion in the nozzle down to zero external pressure the effective velocity c agrees with the actual velocity of motion c_{max} of the molecules since the back pressure at the mouth has become zero and no further expansion takes place outside the mouth. These limiting velocities cannot actually be utilized completely for the rocket thrust since they correspond to infinitely large nozzle mouth areas. It is therefore very important to know how closely, by means of practically constructable nozzles mounted on the aircraft, the effective ejection velocity c can be made to approach the limiting value c_{max}.

5. Adiabatic Flow of Ejected Gases

A numerical estimate of the relations under the assumption, for example, of perfectly adiabatic flow of ideal gases is possible. In this case there is applicable the known relation

$$c_x = c_{max}\sqrt{1 - T_x/T_o}$$

The effective ejection velocity then becomes according to equation (3)

$$c = c_m + p_m/\rho_m c_m = c_{max}\sqrt{1 - T_m/T_o}\left(1 + \frac{\kappa - 1}{2\kappa}\,\frac{T_m/T_o}{1 - T_m/T_o}\right) \quad (16)$$

and the required ratio of the effective to maximum ejection velocity, that is, the "utility coefficient" of the nozzle is

$$\eta_n = c/c_{max} = \sqrt{1 - T_m/T_o}\left(1 + \frac{\kappa - 1}{2\kappa}\,\frac{T_m/T_o}{1 - T_m/T_o}\right) \quad (17)$$

The coefficient is at the same time the ratio of the thrust obtained to the maximum obtainable thrust for the given fuel consumption. Its square is the "internal efficiency" η_d of the rocket nozzle.

Plotting η_n against the nozzle divergence ratio d_m/d', there is obtained figure 6. It may be seen that even with very small divergence ratios the effective ejection velocity already quite closely approaches the theoretical limiting value; for $d_m/d' = 3$, for example, the value is 91 percent so that with such nozzles exhaust velocities of 4000 meters per second (8950 mph) must be attainable with rockets using gas oil—oxygen fuel. There is also plotted the ratio of the muzzle velocity c_m to the maximum velocity c_{max} showing the gain due to the back pressure of the escaping gases at the mouth. This gain naturally decreases with increasing d_m/d' in spite of the larger mouth area, so that strongly divergent nozzles for this main reason are less advantageous as compared with nozzles of smaller divergence as might at first be expected. There is also to be added the fact, already mentioned, that with nozzles of very small divergence or in operation with very small external pressures the escaping gas jet adheres to the forward part of the nozzle so that this ring area is included in the effective nozzle

space and gives additional thrust. For this reason nozzles with very small divergences and even purely cylindrical nozzles give surprisingly high efficiencies. There is also plotted in figure 6 the efficiency $\eta_d = n^2_n = c^2/c^2_{max}$.

6. Dissociation of the Combustion Gases

The actual processes in the combustion gas are not quite so simple as was assumed in the adiabatic computation, for aside from the friction losses, heat losses to the surroundings, etc., very high gas temperatures occur with the high energy concentrations mentioned and hence considerable deviation from the behavior of ideal gases.

For the usual technical combustion processes the combustion at these temperatures becomes incomplete since the gas molecules already formed, for example, H_2O and CO_2 again partly dissociate. The temperature does not go beyond a certain value which, by computation and measurement, for example, on welding flames, is found to be about 3000° to 3500° C depending on the gas pressure. This dissociation binds considerable portions of the heating value of the fuel.

From the theoretical investigation data available, particularly Schule (reference 5) it is found that the gas resulting from the combustion of gas oil and oxygen in the rocket combustion chamber at least 50 percent of the heating value, that is, about 0.5×10^6 kgm/kg is bound in the dissociated state and is therefore not available as heat content. Assuming that during the expansion in the nozzle there is not sufficient time for recombination of the dissociated molecules so that the gas has expanded adiabatically from the heat content corresponding to its initial temperature the energy bound in the dissociation is completely lost for the ejection process. The remainder of the combustion occurs outside the nozzle without any useful effect. The attainable ejection velocities would in this case lie at considerably lower values. Under the above-mentioned conditions there would be obtained for the gas oil-oxygen propelled rocket a maximum possible ejection velocity of about

$$c_{max} = \sqrt{2g \times 0.5 \times 10^6} = 3160 \text{ m/s (7000 mph)}$$

instead of 4570 meters per second (10,000 mph) if the

complete heating value of the fuel were utilized. With a nozzle utilization factor (η_n) of 91 percent the effective velocity would be $c = 2875$ meters per second (6400 mph), that is, the efficiency of the entire process $\eta_d = c^2/c^2_{max} = 42.3$ percent and the $c/c_{max} = 65$ percent.

There are, however, a number of circumstances which tend to make the dissociation in the rocket motor unfavorable to a less extent than indicated above. First, it must be assumed that with the explosive or detonating character of the combustion of gas oil and oxygen there is no sufficient time for the complete establishment of the dissociation equilibrium. In this case the dissociation does not appear to occur to the extent indicated by theory. The temperature of the combustion gases therefore rises above the maximum value limited by the dissociation to the order of magnitude of the sun's temperature and to even considerably higher temperatures in the detonation waves themselves (reference 6). In this way the initial heat content of the combustion gases more closely approaches the available energy of the fuel and the burnt gases behave more like a chemically inactive gas so that the dissociation losses, at least for the initial pressures of the recently burnt gases, are lowered. The initial pressures then increase to the order of magnitude of the detonation pressures.

If the extremely rapid combustion is followed directly by a similarly rapid expansion then the latter process may be considered approximately as an adiabatic expansion of very high initial heat content.

The observed heat radiation also indicates the occurrence of gas temperatures above the values limited by the usual detonation. Furthermore, the mean free path of the gas molecules, particularly at the high combustion chamber pressures is so small compared to the path of the gases through the exhaust nozzle that any existing dissociation, at least as far as free atoms (for example, H, O) are concerned, is compensated during the expansion process. There then occurs during the expansion an afterburning so that the gas temperature remains approximately constant and the expansion during the afterburning is isothermal (reference 1, p. 24).

7. Tests on Rocket Motors.

The very important question as to the attainable ejection velocity of a rocket motor thus cannot be completely answered through computation alone. The author therefore undertook numerous test stand experiments with 14 different rocket motor models of the type sketched in figure 2. Each run was up to a half hour's duration, the measured thrust up to 30 kilograms and the weight of the motors always below 1/2 kilogram. Petroleum gas oil and pure oxygen were at first used as fuels. The oxygen was for the most part gaseous welding oxygen, the liquid form being used only in a few tests because although the combustion was as steady as with the gaseous oxygen the cold atomized liquid oxygen gave considerable ignition lag.

Figure 7 gives a view of the instrument room of the test set-up. At the left is seen the Bosch injection pump for injecting the fuel oil; whereas, on the instrument board itself are mounted indicators for the oil pressure, pressure of the burnt gas, temperature of cooling medium, fuel consumption, duration of test, oxygen consumption, oxygen pressure, etc. All apparatus for conducting the oxygen are for reasons of safety removed from the instrument room, the regulation of the oxygen supply being effected by means of a handwheel over a remote control as shown at the right of the figure.

The test room itself communicates with the instrument room only through a small observation window likewise seen in the picture.

Figure 8 gives a view of the test room one side of which is completely open to the outside, and the test stand. The motor was suspended on a swinging frame which was capable of moving practically only in the direction of the horizontal motor axis. The braking and transmission of the free thrust to the support fixed on the ground was over a horizontal spring dynamometer which at the same time measured the thrust. By this arrangement and a fixed calibration system all frictional forces, elastic forces of the piping, etc., were excluded from the thrust measurement. Both of the above photographs apply to a phase of the test where for the accurate measurement of the heat conduction through the combustion-chamber wall the cooling was effected with water instead of with the fuel itself.

Figure 9 shows the liquid oxygen high pressure tank which was put under a pressure of 150 atmospheres with the aid of the usual gaseous oxygen, the liquid flowing from a control valve in the tank into the combustion chamber.

Figure 10 shows a rocket flight motor operating with 30 kilograms effective thrust. As was to be expected from the theoretical considerations, the attainable effective ejection velocity was found to be only very slightly dependent on the shape and divergence ratio of the ejection nozzle. This lack of sensitivity even extended to nozzles with surfaces that were roughened on purpose. On the other hand, the ejection velocity depended to a very large extent on the quality of the combustion in the combustion chamber.

As factors influencing the combustion the following were separately studied: the turbulence of the fuel, the preheating of the fuel, and the length of time the fuel remained in the combustion chamber.

Turbulence of the fuel after introduction into the spherical-shape combustion chamber was produced to a large extent by structural means. Preheating was obtained by using the fuel to cool the combustion space walls beforeadmission. This preheating was found to be of great advantage for the fuel oil and almost indispensable for the liquid oxygen. The effect of these factors on the the ejection velocity of both was, however, very small in comparison with the effect of the length of stay of the fuel in the combustion chamber, as had been surmised. (reference 1, p. 69).

Denoting by V_o (m^3/kg) the specific volume of the burnt gases in the chamber and by G (kg/s) the weight of gas consumed per second thenits volume is $G\,V_o$ (m^3/s). The length of stay in the combustion chamber is then $t = V_{c\ ch}/GV_o$ (sec) or by making use of the gas equation $p_o\,V_o = RT_o$,

$$t = V_{c\ ch}\,p_o/GRT_o \tag{18}$$

For a given motor the stay interval depends only very slightly on the throttling, as may be seen from the following consideration. Setting

$$P = k_1 f'\,p_o$$
$$P = Gc/g$$
$$T_o c_p = k_2 c^2/2g$$

(where k_1 and k_2 are nozzle constants) into equation (18) and combining all fixed values into a new constant k gives

$$t = k \frac{V_c \; ch}{f' c} \tag{19}$$

For a given motor t and c are therefore inversely proportional. Since, however, c varies only within very narrow limits the stay interval is determined mainly by the choice of the ratio $V_c \; ch/f'$, but to a first approximation is independent of the throttling of the engine.

In figure 11 the obtained effective velocity c of nine different motors is plotted against the stay interval t and a mean curve drawn through the points. This curve is one of the most important obtained from the entire series of tests. The small scattering of the test results is explained satisfactorily by the naturally varying turbulence and preheating of the fuels. It may be seen that for intervals of the order of 1/100 second ejection velocities above 3500 meters per second (7800 mph) are attained, so that no appreciable losses through dissociation occur. Whether at considerably higher stay intervals sufficient time remains for appreciable dissociation and hence a lowering of the c values could not be determined with the system used since the cooling losses through the combustion chamber walls then became considerable.

For the rocket flight engine there thus exists an optimum size of combustion chamber for which the combustion is already sufficiently complete and no appreciable losses through cooling or dissociation occur. According to the test results thus far obtained this size of combustion chamber seems to be attained for about 1/100 second of stay interval. (See also reference 1, pp. 69, 70.)

In the case where appreciable dissociation does not appear for the explosion-type combustion in the rocket chamber the wall temperature must rise to an order of magnitude of 6000° absolute. This value is obtained with the ejection velocity found from the fundamental equation of gas dynamics

$$c_p \; T = k_2 \; c^2/2g$$

where for the nozzles employed $k_2 = 1.2$.

Direct temperature measurements were not possible. The heat conduction through the combustion walls was, however, carefully measured. For the maximum exhaust velocities values up to about 1 hp/cm² through the combustion chamber wall were obtained; this is about 30 times the maximum values obtained with internal combustion engine. If it is assumed, with the combustion technicians, that for the relatively small combustion gas velocities in the combustion chamber the convection is small as compared with the radiation, similar values are arrived at for the temperature of the radiating gas. The ejection velocities obtained are also indirectly confirmed by the temperature observations.

In the numerical test results the work done in introducing the liquid fuel is not specially accounted for because even for high admission pressures the work remains in the region of 1 percent of the output.

Heat losses through the walls of the motor to the surroundings did not arise in the results of the experiments since the heat passing through was taken up mostly by the fuels themselves, and hence was again utilized for the combustion in the chamber.

The experience gained from the very extensive tests cannot here be considered more in detail. Essentially a number of conditions were clarified which had been raised as objections against the possibility of the construction of rocket motors. The most important are as follows:

1. The ejection velocity of the combustion gases, with suitable shaping of the motor, becomes far greater than the mean value of the translatory velocity of the ejected gas molecules.

2. The dissociation of the burnt gas associated with the usual combustion at very high flame temperature leads in the case of the rocket motor to no appreciable losses.

3. The explosive combustion of liquid hydrocarbons with liquid oxygen is perfectly steady with continuous admission.

4. The problem of structural material for the combustion chamber and the nozzle of rocket motors is practically solvable.

That the ejection velocities attained and the safety

of operation are even more readily attainable in full scale construction follows from a number of reasons, for example, from the larger time interval within which the burnt gas remains in the large nozzle for which the velocity of flow is about the same as for the model nozzle, so that recombination after dissociation, afterburning, and so forth, are possible to a greater extent for the larger nozzle. Furthermore, in large nozzles the boundary-layer losses are smaller because of the relatively small nozzle surface area. Because of these geometric relations other conditions remaining the same, the combination wall to be protected of the full-scale nozzle is much smaller, and so forth. There is thus no question of the possibility of applying the results on the model to the full-scale motor. The tests will be continued with high-value fuels with the object of raising the ejection velocity to above 5000 meters per second (11,000 mph).

2. EXTERIOR BALLISTICS OF THE ROCKET AIRCRAFT

Rocket aircraft are analytically investigated the flight paths of which consist only of climb to the desired flight altitudes followed directly by gliding descent. Both climb and descent are so determined that the air forces remain within definite limits which depend essentially on the weight in flight. The computation carried out on the basis of these assumptions with regard to the flight path shows a considerable advantage of the rocket aircraft over the conventional propeller airplane as regards flight speed and ceiling while the range remains about the same because of the necessity of carrying along the fuel oxygen.

1. Notation

a velocity of sound in air (m/s)

c jet velocity of the motor (m/s)

c_a lift coefficient (A/qF)

c_{ao} lift coefficient in neighborhood of ground

c_f friction coefficient

c_w drag coefficient (W/qF)

c_{wd} pressure drag coefficient

c_{ws} drag coefficient of wake

e base of natural logarithms

g acceleration of gravity (m/s^2)

h altitude (m)

l mean free path of air molecules (m)

m Mach number (v/a)

Δp pressure increment above or below atmospheric (kg/m^2)

q dynamic pressure $\gamma/2g\ v^2$ (kg/m^2)

s path traversed (m)

t depth of flight body in flow direction (m)

v flight velocity (m/s)

v_o flight velocity in neighborhood of ground (m/s)

A lift (kg)

F wing area (m^2)

F' main bulkhead area (m^2)

G weight in flight (kg)

G_o weight in neighborhood of ground (kg)

G_a weight at end of subsonic path (kg)

O over-all surface area of aircraft (m^2)

P propulsive force of motor (kg)

R radius of the earth (m)

T inertia force tangential to path (kg)

W air resistance of aircraft (kg)

α angle of attack, half of vertical angle of cone (deg.)

γ air density (specific weight of air) (kg/m^3)

γ_0 air density in neighborhood of earth (kg/m^3)

δ boundary layer thickness (m)

ϵ glide ratio (c_w/c_a)

κ adiabatic exponent

ν kinematic viscosity (m^2/s)

φ inclination of path (deg.)

2. External Forces on the Rocket Aircraft

Since for technical reasons the general constructional features may be assumed to follow those of the conventional propeller aircraft, that is, a propulsive force in the direction of flight, fuselage with special lifting surfaces, similar arrangement of controls, take-off from the ground into the wind, etc., the forces acting on the rocket aircraft are of quite the same type as those acting on the propeller aircraft. The relative magnitudes of the forces differ, however, considerably and on this circumstance is based the special flight performance of the rocket aircraft.

The external forces acting on the aircraft are essentially the aerodynamic lift A of the wings, the drag W of the aircraft, the propulsive force P of the rocket engine, and the weight G of the aircraft. In addition, use is made in the computation of the flight path normal and tangential components N and T, respectively, of the d'Alembert inertia force.

3. Air Forces on the Rocket Aircraft

For the computation of the air forces, particularly in the very important velocity range above the velocity of sound, the actual shape of the aircraft (figs. 12 and 13) (reference 1) is first replaced by the simple geometrical scheme of figure 14. The fuselage is to be considered as a right circular cone joined to a circular cylinder at the base and the wings as thin flat plates at small angle of attack. This scheme for the aircraft was chosen because it is very favorable from a flow dynamics viewpoint at

very high velocities and because definite formulas for the air forces are available for the simple geometrical bodies at supersonic speeds.

The air is first assumed as usual to be a continuous medium with the following properties; zero heat conductivity, free from vortices and external forces, elastically compressible according to the gas laws and frictionless outside the region of the boundary layer.

The air forces are given by the usual formulas:

$$A = c_a \, \gamma/2g \, F \, v^2$$

$$W = c_w \, \gamma/2g \, F \, v^2 \qquad (1)$$

$$\epsilon = W/A = c_w/c_a$$

For moderate velocities of the airplane the air force coefficients c_a and c_w are, as is known, independent of the velocity. The very narrow wing profile and the slender fuselage shape lead to the expectation that the coefficients do not appreciably change up to about the velocity of sound; so for the entire subsonic region of velocities may be set approximately:

$$c_a = \text{const} \quad \text{and} \quad c_w = \text{const}$$

The drag/lift ratio of the aircraft shown in figures 12 and 13 are assumed in the subsonic region to be $\epsilon = 0.2$. In the supersonic velocity range the air force coefficients depend on the flight speed.

The coefficients of the flat plate for small angles of attack α, according to Ackeret-Busemann (reference 7) are:

$$c_a = \frac{4\alpha}{\sqrt{v^2/a^2 - 1}} \quad \text{and} \quad c_w = \frac{4\alpha^2}{\sqrt{v^2/a^2 - 1}}$$

The drag coefficient of a cone of angle 2α in axial flow is, according to Busemann-Karman (reference 8),

$$c_w = c_{wd} + c_{ws} = \alpha^2 \ln \frac{4}{\alpha^2(v^2/a^2 - 1)} + \frac{2}{\kappa} a^2/v^2$$

where the first member gives the pressure drag in front and the second member the wake behind the moving body.

For the free flow at a certain distance from the surface of the body where the flow processes are mainly affected by the inertia forces, the assumption of frictionless flow, as is known, applies with sufficient accuracy. In the neighborhood of the surface, however, the viscosity forces are predominant, so that the energy-consuming Prandtl boundary layer is built up and frictional forces parallel to the surface arise. As is known from experience, these frictional forces do not increase linearly with the velocity near the earth according to the Newton law, but because of the turbulent processes in the boundary layer increase practically with the square of the velocity, the frictional stresses amounting to about 0.3 percent of the dynamic pressure. There would thus be obtained a frictional coefficient referred to the rubbing surface of $c_f = 0.003$.

At the flight altitude of 40 to 60 kilometers (25 to 37 miles) required for practical rocket flight purposes, the free path of the air molecules $l = \nu/a$ becomes comparable with the boundary layer thickness $\delta = \sqrt{\nu t/v}$, for example, $\delta/l = \sqrt{at/vl} \approx 10$. There should therefore hardly be any opportunity for the building up of the usual turbulent boundary layer processes, a fact also indicated according to Busemann by the small value of the Reynolds number $R = vt/al$. The friction at this altitude is therefore considerably smaller than for the flights in the neighborhood of the ground and is therefore small in comparison with the other air forces. This also is indicated by experience with high altitude projectiles.

With regard to the actual magnitude of the air friction under these conditions little information is available. We therefore consider for the present the two limitng cases:

1. The frictional forces of the air on the rocket airplane flying with supersonic velocity are neglected, compared to the other air forces. There are thus considered only the previously given relations for c_a and c_w.

2. The air friction is assumed in addition to the remaining air forces and considered to be of the same order of magnitude as for motion in the dense air region near the ground so that $c_f = 0.003$.

For the scheme of our rocket aircraft shown in figure

14, the air force relations plotted in figure 15 are then obtained, the air force coefficients being referred to the wing area F alone.

$$A = c_a q F; \quad W = c_{wd} q F' + c_{ws} q F' + c_w q F + (+ c_f\, q\, O)$$

For $O = 3.05F$ and $F' = 0.035F$, there is obtained:

$$\bar{c}_a = A/qF = c_a = \frac{4\alpha}{\sqrt{v^2/a^2 - 1}} \quad \text{and}$$

$$\bar{c}_w = W/qF =$$

$$= \frac{c_{wd}\, q\, 0.035F + c_{ws}\, q\, 0.035F + c_w q F + (+ c_f\, q\, 3.05F)}{q\, F}$$

$$= 0.035\, c_{wd} + 0.035\, c_{ws} + c_w + (+ 3.05\, c_f) =$$

$$= 0.035\, \alpha^2 \ln \frac{4}{a^2(v^2/a^2 - 1)} + 0.035\, \frac{2}{\kappa}\, a^2/v^2 +$$

$$+ \frac{4\, \alpha^2}{\sqrt{v^2/a^2 - 1}} + (+ 3.05 \times 0.003)$$

With $\alpha = 0.1$ (angle of attack of wing and half cone angle equal)

$$\bar{c}_a = \frac{0.4}{\sqrt{v^2/a^2 - 1}}$$

$$\bar{c}_w = \underbrace{0.00035 \ln \frac{400}{v^2/a^2 - 1}}_{\text{pressure on body}} + \underbrace{0.050\, a^2/v^2}_{\text{body wake}} + \underbrace{\frac{0.04}{\sqrt{v^2/a^2 - 1}}}_{\text{wing drag}} + \underbrace{(+ 0.00915)}_{\text{total friction}}$$

It may be seen from figure 15 that a constant coefficient of friction, particularly at the high supersonic velocities, would mean a preponderance of the frictional forces compared to the other air resistances. In figure 15 are also plotted the lift/drag ratios with and without friction corresponding to the above two limiting cases.

The true lift/drag ratio, because of the sufficiently laminar flow assumed, will probably lie between the two curves although its precise nature is unknown. In order to simplify the computation as much as possible a value c_a/c_w = const = 5 was therefore chosen. This value is assumed to include also several other resistances of the airplane due to finite thickness of the wings, tail surfaces, etc.

The formulas given by Ackeret, Busemann, and Karman for the air forces at supersonic speed depend entirely on the assumption that the air may be considered as a continuous medium and the angle of attack α at which the air stream strikes all the surfaces is small compared to the Mach angle m. If the latter assumption is no longer satisfied, compression shocks, subsonic velocities, increased air forces, etc., will be encountered at the surface as shown theoretically by Prandtl for the case $\alpha = \pi/2$ (reference 9).

At the flight speeds considered here of from five to ten times the sound velocity, this assumption, even for very slender fuselage shapes and very small angles of attack, is actually not well satisfied. Similarly with the assumption of the air as a continuous medium for the considerably larger free path of the molecules at the flight altitudes of 40 to 60 kilometers.

For the computations below it is therefore a welcome confirmation of their underlying assumptions that also according to the elementary Newton theory the air forces would come out similar to the laws that have shown themselves applicable in the related field of exterior ballistics. We thus consider the air an elastic discontinuum consisting of a large number of mass particles of very small magnitude without mutual effect on each other and exerting perfectly elastic forces on a fixed obstacle, assumptions which have been successfully applied also in the kinetic theory of gases. For the lift coefficient of our wing the relation

$$c_a = 4 \sin^2 \alpha \cos \alpha + 2/\kappa \quad a^2/v^2 = 4 \alpha^2 + 1.43 \, a^2/v^2$$

is then obtained. The first term refers to the pressure on the pressure side and the second term indicates the assumption that there is a complete air vacuum on the suction side. Since both terms represent an upper limit of the air forces, the above relation will be denoted briefly as the "limiting formula."

The flow forces consist here only of the impact forces produced by the air molecules. The "wake," too, consists of impact forces due to the heat motion of the molecules which, because of the motion of the aircraft, act only against the pressure side.

For the conditions actually applying in our case, the above considerations can also be taken as a limiting case which would be realized only if the free mean path depended on the magnitude of the aircraft dimensions, which is the case only at considerably higher altitudes. In figure 16 the c_a values of the flat plate according to Busemann and to the limiting value formula are plotted and both curves are found to be in such good agreement that in what follows use will be made of the latter formula. This is also justified by the consideration that Newton's theory gives a drag/lift ratio independent of the flight speed – an assumption which from the other point of view must be taken to hold only with a certain degree of arbitrariness and also from the fact that Newton's formula by its very nature does not take into account any special frictional forces.

In the air force formulas in equation (1) the coefficients in the supersonic region referred to the wing area are thus found to be

$$c_a = 0.04 + 1.43\ a^2/v^2; \quad c_w = 0.2\ c_a; \quad \epsilon = 0.2 \tag{2}$$

An assumption must also be made with regard to the air density and its dependence on the flight altitude. For simplification Hohmann's formula is chosen for this purpose (reference 10)

$$\gamma = \gamma_0\left(1 - \frac{h}{400000}\right)^{49} \tag{3}$$

which gives the actual relations over the total altitude range here considered. The wing lift in the subsonic range then becomes

$$A = c_a\ \gamma_0/2g\ \ (1 - h/400000)^{49}\ F\ v^2$$

and in the supersonic range

$$A = (0.04 + 1.43\ a^2/v^2)\ \gamma_0/2g\ (1 - h/400000)^{49}\ F\ v^2$$

For the flight relations in the neighborhood of the ground

$$A_o = G_o = c_{ao}\ \gamma_o/2g\ F \cdot v_o^2$$

from which

$$\gamma_o/2g\ F = G_o/c_{ao}\ v_o^2$$

Hence the lift per unit take-off weight of the aircraft is

$$A/G_o = c_a\ v^2/c_{ao}\ v_o^2\ (1 - h/400000)^{49}$$

or

$$A/G_o = v^2/c_{ao}\ v_o^2\ (0.04 + 1.43\ a^2/v^2)$$
$$(1 - h/400000)^{49} \qquad (4)$$

and the drag

$$W/G_o = \epsilon\ c_a\ v^2/c_{ao}\ v_o^2\ (1 - h/400000)^{49}$$

or

$$W/G_o = \epsilon\ v^2/c_{ao} v_o^2\ (0.04 + 1.43\ a^2/v^2)$$
$$(1 - h/400000)^{49} \qquad (5)$$

4. Centrifugal Force on the Rocket Aircraft

The remaining external forces on the aircraft can be given only after a more detailed description of the path properties as a function of h, v, etc. For the present, however, a few remarks will be made regarding the centrifugal force.

The inertia force N normal to the flight path is due to the path curvature and is thus determined by the radius of curvature ρ and the flight velocity v. For the velocities first attainable v may with sufficient accuracy be referred to the starting point. In the flight paths considered later for those cases where N is an important factor, it is permissible with sufficient accuracy to substitute for the flight path radius the distance of the airplane from the earth's center $(R + h)$ where the earth's mean radius is $R = 6.378 \times 10^6$ meters. Then for N

$$N = mv^2/\rho = Gv^2/g(R + h) = Gv^2/gR$$

since even with a rocket aircraft the flight altitude may be neglected in comparison with the earth's radius.

5. The Climb Path in the Subsonic Range

Simple consideration shows that flight speeds above about 500 meters per second (1100 mph) should first be attainable for practically possible take-off velocities without change in the wing lift relations at about 35 to 40 kilometers altitude if constant dynamic pressure is assumed during this climb. The shape of the climb path between $h = 0$ and, for example, $h = 35{,}000$ meters for fixed shape of aircraft (particularly for wing size, wing angle of attack) is a function only of the magnitude and the time variation of the propulsive force. Several practical limits are imposed by the climb curve attainable with the usual means, physiologically unfavorable effect of too high airplane accelerations on the passengers and by the increased structural difficulties of rocket motors of very high power.

A numerical computation is presented of the particularly simple case of a rectilinear subsonic climb path inclined to the horizontal by a constant angle φ. For such a climb path the required propulsive force is completely defined at each instant and can therefore be computed.

Setting the force components parallel and normal to the axis equal to zero gives for the required rocket propulsive force according to figure 17:

$$P = G \sin \varphi + W + T$$

$$A = G \cos \varphi$$

from which

$$P = G(\sin \varphi + \epsilon \cos \varphi) + T$$

or

$$P/G = (\sin \varphi + \epsilon \cos \varphi + 1/g \, dv/dt)$$

From the second equilibrium equation and relation (4) there follows

$$(v/v_0)^2(1 - s \sin \varphi/400000)^{49} = G/G_0 \cos \varphi$$

Setting to a first approximation G/G_a a constant equal to k_p the mean value of the weight over the subsonic climb path, where G_a is the weight of the airplane at

the end of the subsonic and the beginning of the supersonic climb path, there is obtained for v:

$$v = ds/dt = v_0\sqrt{k_1 \cos\varphi}\,(1 - s \sin\varphi/400000)^{-24.5}$$

Integrating once and noting the boundary conditions, there is obtained

$$t = \frac{15700}{v_0\sqrt{k_1 \cos\varphi}\,\sin\varphi}\left[1 - (1 - s \sin\varphi/400000)^{25.5}\right]$$

and

$$s = 400000/\sin\varphi\left[1 - (1 - v_0\, t\; k_1 \cos\varphi \sin\varphi/15700)^{1/25.5}\right] \tag{6}$$

The required value of dv/dt with the aid of the fundamental relation $dv/dt = v\, dv/ds$ is obtained as

$$dv/dt = v_0^2\, k_1 \sin 2\varphi/326400\,(1 - s \sin\varphi/400000)^{-50}$$

The thrust to weight ratio is then

$$P/G = kc/g = \sin\varphi + \epsilon\cos\varphi + v_0^2\, k_1 \sin 2\varphi/32640\, g\,(1 - s \sin\varphi/400000)^{-50} \tag{7}$$

where k gives the fraction of weight G given off by the rocket per second and c the ejection velocity of the gases (hence only the combustion gases are considered here as the accelerated gas masses in the sense of the propulsion). Furthermore, the total decrease in weight on the subsonic climb path up to each instant of time is

$$dG = -GK\,dt$$

$$G/G_0 =$$

$$e^{-gt/c\,(\sin\varphi + \cos\varphi) - v_0/c\sqrt{k_1\cos\varphi}\,[(1 - v_0 \sin\varphi\sqrt{k_1\cos\varphi}\; t/15700)^{-0.98} - 1]} \tag{8}$$

The angle of inclination φ of the subsonic path is to be so chosen that the fuel consumption is a minimum.

Taking $v_0 = 80$ m/s (180 mph), $v = 530$ m/s (1200 mph), $c = 3700$ m/s (8250 mph), and $\varepsilon = 0.2$, a flat minimum of the fuel consumption is obtained for $\varphi = 30°$. With this value a few of the characteristic magnitudes for the climb path like flight velocity v, distance covered s, effective rocket thrust P/G, and actual airplane acceleration dv/dt are plotted as functions of time in figure 18. It is noted first of all that the applicable take-off accelerations must remain throughout within moderate limits to prevent the airforces during climb from increasing beyond a desired degree and hinder rather than assist the climb.

The subsonic climb with favorable climb angles discussed above is only one branch of the long flight path further described below of a rocket aircraft.

6. The Climb Path in the Supersonic Range

The nature of the supersonic branch of the climb path is influenced to a very large extent by the circumstance that the air forces in the supersonic range increase much more slowly with the velocity than is the case for the subsonic range. Practically this means that very considerable flight velocity increments can be balanced with respect to the air forces by only small altitude displacements of the flight path so that all practical rocket flight velocities are possible within the flying altitude range of about 40 to 60 kilometers. From an economical point of view it is of great importance within this velocity range that the centrifugal force on the flight path due to the curvature of the earth's surface increases to a considerable magnitude and replaces more and more the power-consuming lifting force of the wing so that to a certain extent the flight becomes a gravitational motion about the earth's center.

In contrast to the subsonic climb path the supersonic branch extends over very large horizontal stretches in comparison with which, according to what was said above, the vertical climb paths are small. It is along this branch that great kinetic energy is attained. Corresponding to the very small path inclination and because of the great difficulties of an exact mathematical computation it is assumed that, for the supersonic branch of the climb path, the airplane axis is approximately always horizontal; so the diagram of forces is that shown in figure 19. The action of the power plant, and not the shape of the flight

path, is here in advance so chosen that the effective airplane acceleration is constant and equal to the value attained at the end of the subsonic climb path. In this way the modification of the power plant for higher thrusts than those necessary in the subsonic range is avoided. The rocket thrust decreases continuously during the supersonic climb as the weight of the aircraft decreases so that $P/G = kc/g$ is constant; where k is the constant per second change in unit weight of the aircraft. Hence the change in weight per second of the entire airplane is equal to $G\,k$ and thus decreases with G. The weight decrement dG in time dt is therefore

$$dG = -G\,k\,dt$$

whence

$$G/G_o = e^{-kt}$$

which relation could naturally also have been obtained directly from the so-called fundamental rocket equation. For the rocket thrust

$$P/G_o = kc/g\ e^{-kt}$$

the centrifugal force

$$F/G_o = v^2/g\,R\ e^{kt}$$

the axial inertia force

$$T/G_o = 1/ge^{kt}\ dv/dt$$

By equating to zero the force components of the resultant in the vertical and horizontal directions, there is obtained

$$\Sigma V = 0\ .\ .\ .\ v^2/gRe^{kt} + 1/c_{ao}\ v_o^2$$
$$\times\ v^2(165300/v^2 + 0.04)(1 - h/400000)^{49} = 1/e^{kt}$$

$$\Sigma H = 0\ .\ .\ .\ kc/ge^{kt} =$$
$$= \epsilon/c_{ao}v_o^2 \cdot v^2(165300/v^2 + 0.04)(1-h/400000)^{49} + 1/ge^{kt}\ dv/dt \tag{9}$$

Eliminating h from both equations, the differential equation between v and t is obtained

$$dv/dt = kc - \epsilon g + \epsilon v^2/R$$

which by one integration gives

$$v = \frac{v_a \sqrt{\epsilon R(kc - \epsilon g)} + R(kc - \epsilon g)\tan t \sqrt{\epsilon/R(kc - \epsilon g)}}{\sqrt{\epsilon\ (kc - \epsilon g)} - \epsilon v_a \tan t\sqrt{\epsilon/R\ (kc - \epsilon g)}} \tag{10}$$

where v_a is the limiting flight velocity between the subsonic and purely supersonic ranges and t the time from the start of the supersonic path. The flight velocity at each instant is thus known. The corresponding flight altitude as a function of t and v is directly obtained from the above equation $\Sigma V = 0$.

By integrating a second time the above differential equation there is obtained the horizontal path traversed at each instant of time. We shall not try, however, to obtain the very inconvenient formula for s, which gives an unjustified appearance of very great accuracy, but instead estimate the horizontal path by assuming a mean constant airplane acceleration of magnitude

$$b = dv/dt = \text{const} = kc - \epsilon g + \epsilon/R\ (v + v_a)^2/4$$

$$s = \frac{v^2}{2b} = \frac{v^2}{2kc - 2\epsilon g + \epsilon/R\ (v + v_a)^2/2} \tag{11}$$

In figure 20 the velocities, horizontal distances of the supersonic path, and the fuel consumption are plotted as functions of the time, taking $\epsilon = 0.2$ and $k\ c = 15\ m/s^2$.

Because of the neglected thrust work during the supersonic climb path the velocities will actually come out a few percent less than the values given by the figure.

The relation between the flight altitude h, the remaining path variables, and the variable weight is obtained by combining equations (9) and (10).

7. The Descent Path in the Supersonic Range

The climb path ends after required flight velocity is attained and the rocket airplane flight is now continued

with this velocity at constant altitude and with the motor performing the work required to overcome the remaining air resistance. The very favorable mode of action of rocket propulsion at high velocities likewise show up for this part of the flight. At a suitable distance from the desired goal the power of the motor should be shut off and the rocket airplane then begins to describe the descent path under the action of the retarding air resistance. Since the angle between the path tangent and the horizontal at the upper portions of the descent path is very small, the force relations shown in figure 21 may be used to discuss the descent relations. The forward propulsive force is the inertia force T which arises from the retardation of the aircraft by the air resistance, that is, which must be supplied from the kinetic energy of the airplane mass. The descent path extends over very great distances corresponding to the available energies; hence it is economical not to fly with the power on over the entire flight at high altitude but to start the descent path directly after the supersonic climb.

Because of the smallness of the potential in comparison with the kinetic energy at the initial flight altitudes under consideration, the potential energy need not at first be considered, account being taken of its effect in lengthening the path by a subsequent estimate. In view of the uncertainty of our formulas on the air densities and air resistances a more accurate computational method has little practial value.

With the vertical and horizontal components of the resultant force set equal to zero, there is again obtained from the fundamental dynamic equation:

$$\Sigma V=0 \ldots v^2/gR+1/c_{a\,0}v_0^2\ v^2(165300/v^2+0.04)(1-h/400000)^{-9} = 1$$

$$\Sigma H=0 \ldots \epsilon/c_{a0}v_0^2\ v^2(165300/v^2+0.04)(1-h/400000)^{49}=1/g\ dv/dt \tag{12}$$

Eliminating h there is obtained as the differential equation between v and t:

$$g\,\epsilon - v^2\epsilon/R = dv/dt = d^2s/dt^2$$

One integration gives

$$v = \sqrt{gR}\ \frac{e^{2\epsilon t\sqrt{g/R}} - (\sqrt{gR} + v_0)/(\sqrt{gR} - v_0)}{e^{2\epsilon t\sqrt{g/R}} + (\sqrt{gR} + v_0)\ (\sqrt{gR} - v_0)} \tag{13}$$

where v_0 is the flight velocity at the initial flight altitude. The flight velocity at each instant is thus known.

The relation between v and h is obtained from the first of equations (12) and the results are plotted in figure 22. The figure also gives the relation between the two variables under the assumption of constant dynamic pressure, an assumption which corresponds approximately to the actual conditions for flight velocities below the velocity of sound. Integration of the differential equation a second time gives the horizontal distance traversed at each instant:

$$s = t\sqrt{gH} + R/2\epsilon \ln\left(\frac{1 + (\sqrt{gR} + v_0)/(\sqrt{gR} - v_0)}{e^{2\epsilon t\sqrt{g/R}} + (\sqrt{gR} + v_0)/(\sqrt{gR} - v_0)}\right)^2$$

With the relations thus obtained the descent path can be computed from each initial flight altitude as long as the flight velocity remains in the supersonic range, that is, the assumed air resistance law with variable c_a remains sufficiently valid. This generally is the case down to altitudes of about 40 kilometers.

The dependence of the length of path traversed and the time it takes on the initial flight altitude is obtained with the aid of the preceding relations and the values in figures 22 and 23, still assuming $\epsilon = 0.2$. The descent paths starting from high altitudes are very long. Since the longest passage over the earth cannot be greater than about 20,000 kilometers, the maximum altitudes to be considered in traveling between different points of the earth cannot exceed about 60 kilometers (37 miles) since the descent path from this altitude already extends over the entire length of the required flight distance. The time for this descent over 20,000 kilometers is about 85 minutes.

8. The Descent Path in the Subsonic Range

Since in the range descent path with subsonic velocity the effect of the centrifugal force is practically no longer existent and the air force coefficients may be considered as constant, the air resistance is similarly constant over the entire remaining descent path and the length of the latter can be computed in the simplest manner from the available energy and the air resistance.

At 40 kilometers (25 miles) altitude, for example, the total available energy is about 60,000 kgm per kilogram weight of the aircraft. Again assuming for the subsonic range a drag/lift ratio $\epsilon = 0.2$, there is obtained 0.2 kilograms for the constant air resistance per kilogram weight of aircraft and the length of the subsonic descent path becomes

$$s_u = 60000/0.2 = 300,000 \text{ m} = 300 \text{ km}$$

The flight velocity on this subsonic descent path drops from the approximate initial value of about 1900 km/h (1180 mph) to about 150 km/h (93 mph) near the earth in such a manner that the dynamic pressure remains constant in spite of the variable air density, the entire subsonic branch being traversed in about three-fourths of an hour. These values are quite independent of the initial altitude at which the descent began provided the altitude under the assumptions made was only slightly greater than 40 kilometers (25 miles).

9. Summary of Flight Performance

The outstanding flight performance factors of the rocket airplane are its flight velocity and flight altitude. A third very important performance factor is the range. Under the assumed rocket flight process described above all these three factors are necessarily connected; hence the description of the dependence of any one of them on any desired parameter will enable complete performance data to be obtained. Since the range is the main factor that determines the practical utility of a rocket airplane, this factor will be considered first. As in the case of the conventional airplane it is determined by the quantity of fuel that can be carried along and thus clearly by the ratio G/G_0 of the airplane weight at any time to the initial weight G_0.

From figure 20 there is obtained the relation between G/G_0 and v shown in figure 24, account being taken of the fuel consumption according to equation (8). The relation between v and s of figure 24 is obtained with the aid of the relations in sections 7 and 8. Finally, from the two curves there is obtained the relation between G/G_0 and s, which is of main interest here. It may be seen that the securing of sufficient ranges through corresponding values of the ratios G/G_0 of the rocket airplane makes unusual demands on the designer and that this ratio

aside from the practical construction of a reliable rocket motor of high jet velocity, is at the core of the entire rocket flight problem.

The small weight of the rocket propulsive system and the very high wing loading permitted by the high starting thrust open up new unforeseen possibilities. With the loading ratios $G/G_0 = 0.30$ at present attainable on conventional airplanes the range according to figure 24 would be little more than 1000 kilometers (620 miles) horizontal distance. In order that the propeller-driven airplane attain the maximum non-stop ranges ratios of $G/G_0 = 0.15$ to 0.10 would be necessary which probably lie beyond the structurally attainable limit. The attainment of a desired range through extreme reduction in the weight when empty, maximum possible streamlining of the aircraft, and maximum jet velocity of the motor will thus have to become the most important task of the designer. But even with the not too favorable assumptions thus far made with regard to the rocket aircraft characteristics, a non-stop range of about 4000 to 5000 kilometers (2500 to 3100 miles) may be confidently expected, which thus exceeds the flight range of the majority of our known airplanes, particularly the high-speed airplane.

The outstanding advantage of the rocket airplane compared with the propeller-driven airplane lies in the flight velocity. The maximum velocities themselves are limited by the weight ratio G/G_0 and they in turn limit the distance ranges according to figure 24. The maximum flight velocity on a 5000-kilometer flight is, for example, about 3700 meters per second or about 13,300 kilometers per hour (8250 mph). This velocity is maintained, however, only for a short time at the end of the climb path. The mean cruising velocity of the 5000-kilometer flight is computed from the time required for each branch of the path and is found to be about 1000 meters per second or 3600 kilometers per hour (2240 mph). For shorter flights the average mean velocity, because of the fixed, relatively large subsonic flight times is somewhat smaller and increases considerably for longer flight ranges. The rocket flight paths here described serve mainly to solve the transport problem between various points of the earth and are suitable for maximum possible ranges and thus have nothing to do with the ceiling altitude attainable by rocket airplane flight. Only those altitudes are flown which are required for a given flight range. This altitude range is rather narrow according to figures 23 and 24 and for all flight distances that enter into consideration varies between 40 and 60 kilometers.

The flight performance was discussed here preferably in terms of the load ratio G/G_0 of the aircraft. The dependence on the jet velocity, drag/lift ratio, etc., can be determined readily with the aid of the data given and similarly the very strong dependence of the required flight altitudes on the initial wing loading can be computed.

In summarizing, it may be said that the rocket aircraft producible with the given technical means, under the assumptions made, as compared with the conventional propeller-driven airplane will possess the advantages of about 20 times the maximum and cruising velocity, 5 times the ceiling altitude, and predominantly non-stop flights between points.

3. ROCKET AIRCRAFT IN ACTIVE AIR DEFENSE

1. The Limits of Performance of Propeller-Driven Aircraft

For offense and defense the fighting quality of an aircraft depends to the greatest extent on its velocity and its rate of climb. Every effort has been made toward developing these two performance factors; although no sweeping progress has been achieved since the last war. The explanation for this lies in certain mechanical relations inherent in the conventional propeller-driven aircraft. The maximum speeds have been attained on airplanes built specially for high speeds, values of 700 kilometers per hour (435 mph) having already been obtained.

The gradual rise in maximum speed in the last decade to the above value has been made possible through very great increase in the engine performance and to some extent through aerodynamic refinement. The maximum speeds of civil, sport, and military planes have always lagged notably behind the speed records.

The slow, laborious manner by which higher speeds are attained indicates the approach toward a limit of the attainable flight speed, which will hardly be above 1000 kilometers per hour (620 mph) with our present type engine-propeller drive. This is first of all due to the fact that the required engine power, and hence also the engine weight, rapidly increases with the speed of flight; therefore the weight of the engine soon constitutes the largest part of the over-all weight of the airplane. In the hardly

attainable case where the entire power plant weighs only 1/2 kilogram per horsepower output at the propeller and the air resistance is 1/3 the gross weight of the airplane there follows from the fundamental mechanical relations a flight speed of at most 1600 kilometers per hour (1000 mph) for the power plant itself. Since the airplane body itself cannot, of course, be dispensed with, the weight to be dragged along by 1 hp is more than 1/2 kilogram - with the present-day speediest racing airplanes over 1 kilogram - and hence the speed smaller than the indicated value, in the given case smaller than half of 1600 kilometers per hour. That it will still be possible, however, to build considerably lighter airplane engines on present principles is improbable after 14 years of intensive development.

It is not only the engine, but also the propeller, which prevents the airplane speed from soaring to very high values. Since the rotational speed of the propeller tip must always be a multiple of the flight speed, for example, 1000 kilometers per hour (620 mph), the propeller tip velocities approach those of projectiles. For such high tip velocities the propellers for aerodynamical reasons operate at very low efficiency, thus dissipating the useful engine power (also the stresses, particularly those due to the centrifugal forces) increase so rapidly that the structural material can no longer withstand them. In addition to these reasons, there are still others like the excessively high take-off and landing speeds, the engine cooling difficulties that increase with speed, etc., all of which operate to limit the attainable flight speeds.

The second important requirement of a military airplane is its ability to climb rapidly. Of greatest interest here is obviously the time required by the airplane to climb to a given altitude, for example, to 5000 or 10,000 meters. The above-mentioned power plant weighing 1/2 kilogram per horsepower output at the propeller could, according to elementary mechanical principles, climb to 5000 meters in about 1/2 minute in extreme cases and again without airplane body or pilot or armament. Since these things must be taken along and the given output is by far not so ideally converted, the actual time to climb is always considerably greater than this theoretical limiting value. The smallest actual times of fighter airplanes to climb to 5000 meters are from 5 to 7 minutes. In this field, too, therefore remarkable further progress along the usual path is hardly attainable.

With this state of affairs increased interest has been developed in the rocket airplane, which does not

suffer from any of the performance limitations mentioned and should take over the further development of aircraft.

2. The Rocket Power Plant

The thrust-producing propeller slipstream is replaced in the rocket plane by a propulsive gas jet. Considerable progress has in recent times been made in the construction of rocket propulsion systems for airplanes. Although this work should serve primarily for the peaceful conquest of the stratosphere the possible military application should not be overlooked.

The problem of rocket flight at the present time is at about the same stage of development as propeller flight 30 years ago and a similar military incentive for its development is probable. The reasons for this will be indicated in the following.

The high rate of energy conversion in the rocket motor makes possible naturally an aircraft with extremely high flight performance while sufficient time is available for conducting a combat of a fighter plane or to lift a high-altitude plane to the upper limit of the stratosphere and accelerate to a velocity several times that of a projectile so that it can continue its flight from the momentum acquired with the engine power off.

The upper stratosphere is the element within which the rocket airplane most suitably operates, where because of the low air density the flight velocities are of the order of magnitude of the exhaust velocities of the engine so that also for the rocket plane efficiency considerations acquire reasonable importance. Moreover, in this range of altitudes the non-dependence of the rocket motor on the density of the external air can be fully utilized.

If, however, the requirements of economy may yield to the attainment of a certain maximum performance - and this is particularly the case with military weapons - then the application of rocket airplanes in the troposphere and the lower stratosphere may also be considered. This latter possibility of application leads to the rocket fighter airplane.

3. The Rocket Fighter Airplane

It may be assumed that the general design is approximately the same as the one sketched in figure 25, which shows a single-seat, light, very fast pursuit (or fighter) airplane for the destruction of enemy air forces, particularly for defense against bombs, with flight speeds up to 1000 kilometers per hour (620 mph) and a climb performance of 4 minutes to 20 kilometers altitude, combat activity being restricted to about 1/2 hour. At the end of this time computed from the instant of starting, a landing is necessary for refueling.

The fuselage is adapted to the aerodynamic relations for velocities that approach the velocity of sound. The nose is very slender and sharp-edge for the reduction of the form pressure drag. The tail is similarly slender to reduce the possibility of flow separation which is particularly threatening at these velocities. The wing profile, too, is suited to the high subsonic velocities. The wing area is obtained from the unusually high wing loading, especially in take-off. The resulting very high take-off velocity is not dangerous since the rocket motor (similar to the turbine) is very capable of taking an excess load and permits take-off thrusts of the magnitude of the take-off weight. Through the high initial acceleration the take-off run becomes very short and take-off can be effected from a concrete strip 150 to 200 miles long, that is, practically from the take-off area of any airport. The wind direction plays quite a small part; hence even special take-off runways of concrete or similar material should not be too expensive. Landing after consumption of the fuel supply is possible in the usual manner on every flying field since then the wing loading acquires normal values.

The pilot's cabin must be airtight and contain the small number of required instruments. Since the rocket fighter airplane is able to rise to altitudes of 20 kilometers and more and in the case of a surprise attack on an enemy airplane below must fly through an altitude difference of many kilometers in a matter of seconds, the air pressure fluctuations that arise must be kept down by the pilot.

A machine gun mount is provided in the nose ahead of the pilot's cabin. It is best to mount a multiple-barrel machine gun with maximum firing rate, the individual barrels not running parallel, as is usually the case, but somewhat divergent and immovably attached to the airplane.

The dispersion cone during the few seconds of fighting covers a large area ahead of the nose with a thick hail of effective projectiles so that the probability of success of an energetic attack at small distance is very large. As is obivous, the probability of successful defense by the surprised slower opponent is considerably smaller.

The very large tanks for accomodating the great quantities of fuel are arranged behind the pilot's cabin. The fact that the fuel consists very largely of liquid oxygen offers no special difficulty since such large quantities of liquid can be kept without any appreciable losses for the required short time intervals in quite ordinary thin-wall sheet metal tanks. The tanks must be of sufficient capacity to receive a weight of fuel up to 80 percent of the total take-off weight of the airplane.

The rocket propulsion system is mounted at the tail. A peculiarity of the fighter airplane is the applicability of a jet apparatus about which a few words remain to be said. Every reaction drive - including airplane as well as ship drive - operates most effectively at minimum slip, that is, when the ejection velocity of the driving masses and the velocity of motion of the driven body are opposite and as nearly equal as possible. For pure rocket propulsion systems the slip should theoretically even be zero, that is, both velocities of exactly equal magnitude in order that the efficiency be a maximum.

Now the exhaust velocities of a rocket motor are about 10 times the magnitude of the velocities that are desired of the fighter airplane. There can thus be no question of equality or even of similarity of the two velocities and hence of an efficient propulsion of the airplane. This unfavorable relation between the velocities affects the flight characteristics of the fighter airplane as far as the usual rocket motor consumes the entire fuel supply of the airplane within one-half hour, for example, so that the airplane can be in active combat for this time only; whereas a more economical engine which for equal propulsive power has a smaller ejection velocity will be able to fight over a longer period with the same fuel supply, for example, a whole hour, thus doubling its fighting capacity.

A simple means for improving the external efficiency of the rocket motor in the airplane consists in sucking air from the surroundings with the aid of the propulsion gases by injector action and ejecting it backward. In

figure 25 the jet apparatus required for this purpose is indicated at the tail end of the fighter airplane. Extensive tests on the mode of operation of such jet apparatus has been conducted in France and the United States (reference 11). Although the initial high expectations were not realized, it appears that with its aid the indicated doubling of the flying time of the fighter rocket airplane is entirely attainable.

A feature to be noted is the small over-all dimensions of 10 meters span and 10 meters fuselage length for which such airplanes may be designed. The size of the single-seat fighter thus corresponds to that of a small sport airplane. This condition, together with the offensive method of fighting, is of great importance for practical applicability.

The unusually simple over-all construction involves only very small costs. This and the crew of only one man make it possible for pursuit airplanes of this type to be easily produced in large numbers and for the loss of a single machine not to count very heavily.

The mode of operation of the single-seat rocket fighter may be assumed to be the following:

The airplane is fueled or refueled from a movable ground reservoir shortly before the intended flight to avoid rather large losses of liquid oxygen. Take-off is effected from a very short but very good runway of at most 200 meters length, for example, a concrete strip, or a good open street. The airplane takes off as if shot from a bow and rises after a very short run. After take-off the airplane can easily rise along a straight-line path inclined 30° to 45° to the horizontal, the time to climb to 10 kilometers altitude taking about 2 minutes and to 20 kilometers altitude about 4 minutes.

The maximum velocities are attained at the very high flight altitudes where the air is at low density. In this respect there is a fundamental difference as compared with the propeller-driven airplane, in which case the low-density air sharply reduces the engine power.

By operating at full throttle the maximum velocities can be obtained also at the lower altitudes and particularly after full climb, so that the attack can occur at a 45° angle. This circumstance makes it possible for the fighter airplane to await the approach of the enemy on

the ground and after sighting to make a surprise attack from below.

With its small over-all dimensions and its flight velocity of the order of medium projectile velocities the fighter plane as it flies past is no longer visible to the human eye. Recognition of an approaching airplane at distances greater than about 1 kilometer will only accidentally be possible since the speed of the airplane is equal to that of its noise. The distance of 1 kilometer within which it may with probability be observed is passed over in three seconds during an attack. A successful defense from the object attacked within the three seconds available is possible only in isolated cases, especially since the attack can be made from almost any direction in space. A defense from points which do not lie in the direction of the flight path is impossible since the airplane is not clearly recognizable from these points and has almost the velocity of the projectile fired on it. For this reason , too, the side firing against the vulnerable tanks is not possible.

This mode of combat undoubtedly makes unusual demands upon the skill of the pilot especially as at maximum velocity only a small deviation from the given flight direction is possible. For a radius of curvature of 1 kilometer, for example, acceleration forces 10 times the force of gravity arise. On the other hand, the flight speed, particularly after partial utilization of the fuel can be reduced to a fraction of the maximum velocity. A serious combat between rocket airplanes in the air is hardly possible. According to the requirements of the engine the fighter airplane provided with ajet apparatus can maintain itself in this way in the air from 1/2 to 1 hour and must then land for refueling. The action radius correspondingly amounts to several hundreds of kilometers.

After a period of development rocket airplane for defense against bombers, observation, combat airplanes, and airships, and so forth, will undoubtedly be of superior advantage to all weapons at present employed. They will also become the only weapon for defense against propeller-driven bombers which, flying the lower stratosphere, attain considerable velocities and extremely large ranges and will be proof against every defense from the ground or against similar aircraft as a result of their flight altitude.

4. The Rocket Bomber

The rocket airplane finds its natural application to the upper stratosphere. It takes off from the ground in the manner described above, climbs at full power to a 40- to 50-kilometer altitude at first along a 30° inclined path which later flattens out, reaching final velocities of the order of magnitude of the exhaust velocity. In this case therefore the jet apparatus is not applied. The time required for this climb is 15 to 20 minutes, in which time the total fuel supplies on board are consumed. After the peak of its path is reached, the rocket motor is stopped and the aircraft continues its flight as a kind of glide, utilizing its reserve of kinetic and potential energy. This type of motion is not unlike that of a long-range projectile which equally describes a gliding path from a similar altitude. In the case of the rocket airplane this possibility of gliding is considerably increased by the wings so that the downward path extends over many thousands of kilometers, the velocity steadily decreasing from the extremely high initial values down to the normal landing velocity as the density dncreases in the lower air layers. During this time the entire descent path is up to a certain degree controllable by the pilot. Such flights as these should serve to establish rapid communication over the oceans.

Figure 12 shows the external shape assumed by rocket airplanes of this kind to suit the extraordinarily large flight velocities and the corresponding aerodynamic relations. The use or rather the abuse of this type of rocket airplane for bombing purposes is evident. The bombing flight may be considered to be carried out as follows: The rocket airplane takes off and climbs as for long-range flight to altitudes over 40 kilometers and velocities several times that of sound in the direction of the ground object to be attacked. At a precomputed instant the suitably shaped torpedo bombs are released from the aircraft and the latter returns over a very wide arc to the starting point while the torpedoes maintain the original flight direction and approach the object in the shape of a downward-sloping branch of a ballistics curve. The distance between the starting place and the target may amount to several thousand kilometers; the bombs are released shortly ahead of the target so that the chances of a direct hit through suitable precautions may be far greater than those of a long-range gun. This mode of combat is completely independent of weather conditions and time of day at the target because of the possibility of astronomical orientation in the stratosphere.

The costs of one bombing flight can in no way be compared with those of a long range projectile. There is no risk at all for the aircraft since by its height and speed it is completely outside the range of any human counter measures.

Again, the rocket airplane through this transition phase between the purely aeronautical and ballisticsfields appears to be preeminently suitable to continue from where the usual long range projectile has reached the limit of its performance in quite the same manner as it serves to further the development of the conventional airplane. In general, rocket flight in very many respects may be considered as intermediate between pure flight technique and ballistics since both fields of knowledge are drawn from equally and by combining them a stimulus is provided for greatly increased performance.

It is not intended with the above remarks to imply that the object of rocket flight technique is the creation of new and terrible war weapons. The actual danger of such should not, however, be dismissed. With rocket airplanes the fastest possible communication between nations will be established. If the rocket airplane provides a people with a means for defense of its territory against attacks of its neighbors it will similarly be welcome. But it will also serve its purpose if in its most frightful application it helps to establish the downright conviction that a war with new technical means knows only of conquered peoples.

Translation by S. Reiss,
National Advisory Committee
for Aeronautics.

REFERENCES

1. Sänger, E.: Raketenflugtechnik. (München) 1933.

2. Esnault-Pelterie, R.: L'Astronautique. Lahure (Paris) 1930, p. 118.

3. Cranz: Lehrbuch der Ballistik. Springer (Berlin) 1927, Bd. 2, p. 416.

4. Kampé de Fériet, J.: Mém. de l'Art. franc. Vol. IV, no. 2, 1925, p. 289.

5. Schüle: Neue Tabellen und Diagramme für technische Feuergase und ihre Bestandteile von 0° bis 4000° C. Springer (Berlin), 1929.

6. Becker, R.: Physikalisches über feste und flüssige Sprengstoffe. Zeitschrift techn. Physik 1922, Nr. 7,
Geiger, H., and Scheel, Karl: Handbuch der Physik, Bd. XI, 1926, p. 369.

7. Busemann, A., and Walchner, O.: Profileigenschaften bei Ueberschallgeschwindigkeit. Forschung auf dem Gebiete des Ingenieurwesens, vol. 4, March-April 1933, pp. 87-92.
Betz, A.: Gasdynamik, in Hütte des Ingenieurs Taschenbuch, Bd. I, 1931.

8. Busemann, A.: Flüssigkeits- und Gasbewegung, in Handwörterbuch der Naturwissenschaften, 2d. ed., 1933.

9. Prandtl, L.: Gasbewegung, in Handwörterbuch der Naturwissenschaften, Bd. 4, 1st ed., 1913.

10. Hohmann: Die Erreichbarkeit der Himmelskörper, (München) 1925.

11. Kort: Raketen mit Strahlapparat. Z.F.M., 23 Jahrg., Nr. 16, Aug. 27, 1932, pp. 483-86.
Jacobs, Eastman N., and Shoemaker, James M.: Tests on Thrust Augmentors for Jet Propulsion. T.N. No. 431, NACA, 1932.
Schubauer, G. B.: Jet Propulsion with Special Reference to Thrust Augmentors. T.N. No. 442, NACA, 1933.
Schmidt: Raketen mit Strahlapparat. Z.F.M., 24 Jahrg., Nr. 15, Aug. 14, 1933, pp. 411-12.

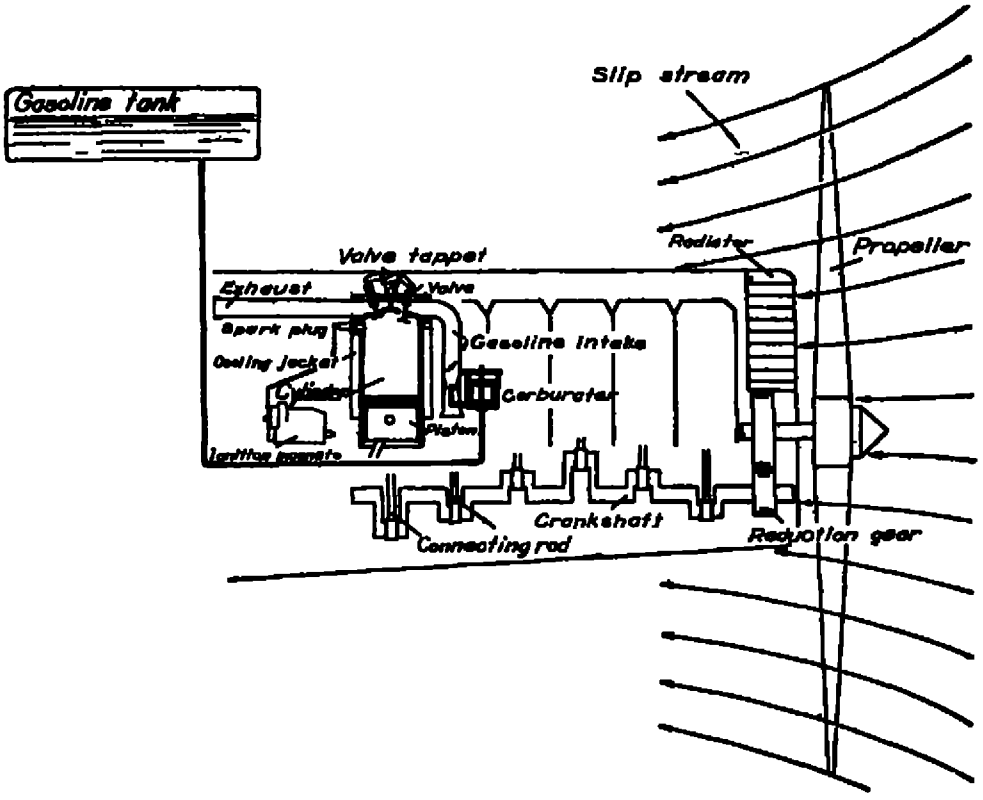

Figure 1.- Engine-propeller propulsion system.

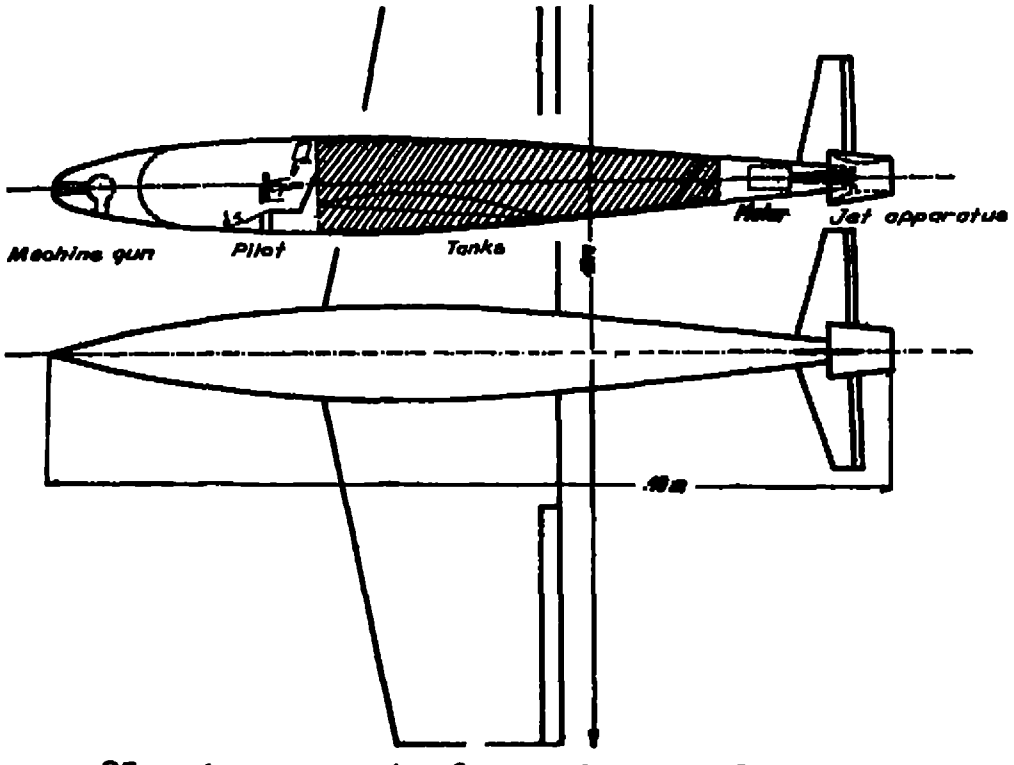

Figure 25.- Arrangement of a rocket single-seat fighter.

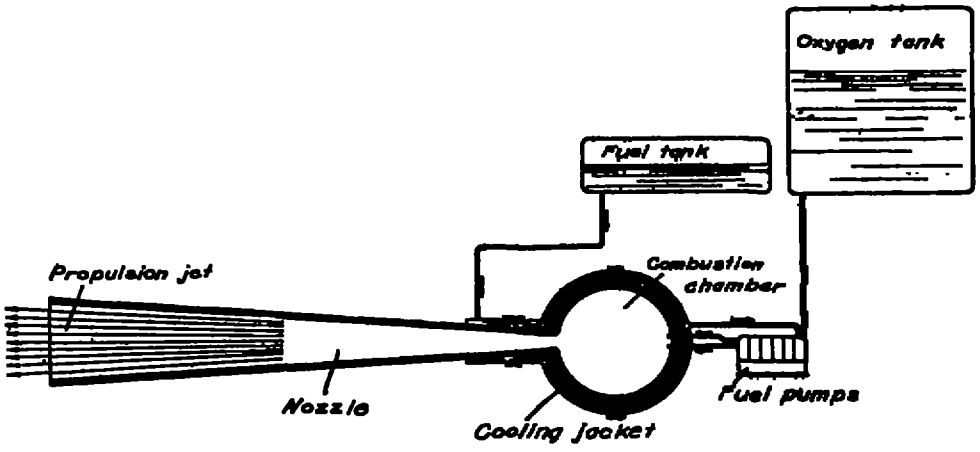

Figure 2.- Rocket propulsion system.

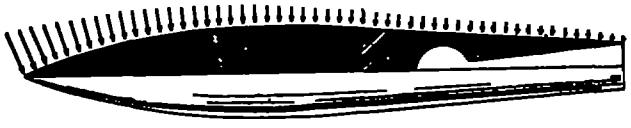

Figure 3.- Air pressures at the airplane.

Figure 4.- Propulsion gas pressure at the airplane.

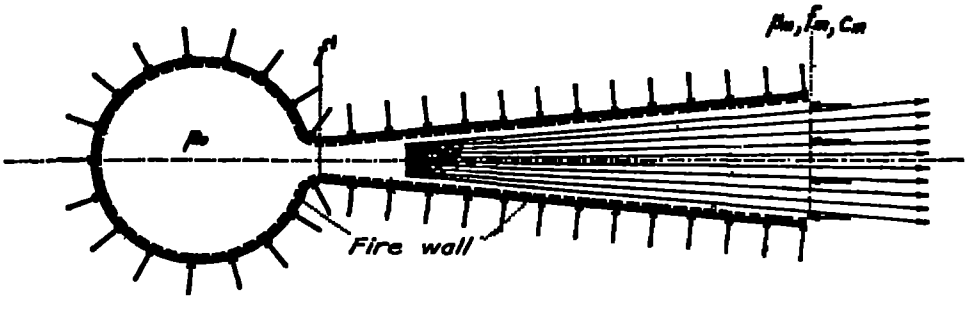

Figure 5.- The rate of change of the momentum is equal to the pressure acting on the bounded mass of the propulsion gases.

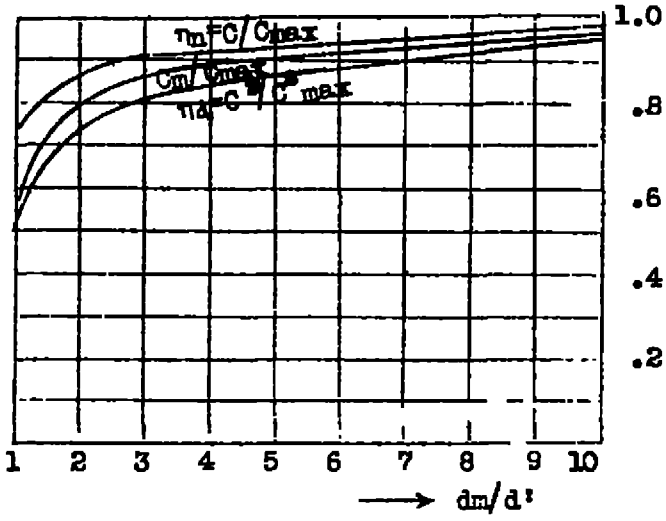

Figure 6.- $\eta_m = C/C_{max}$ and $\eta_d = C^2/C^2_{max}$ of the nozzle for adiabetic flow of the propulsion gases, $\kappa = 1.4$.

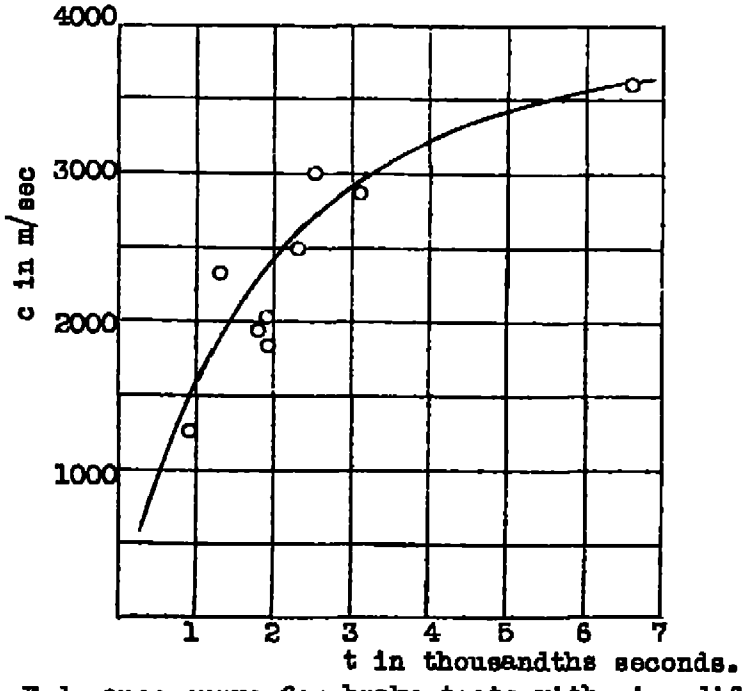

Figure 11.- Endurance curve for brake tests with nine different model rocket motors.

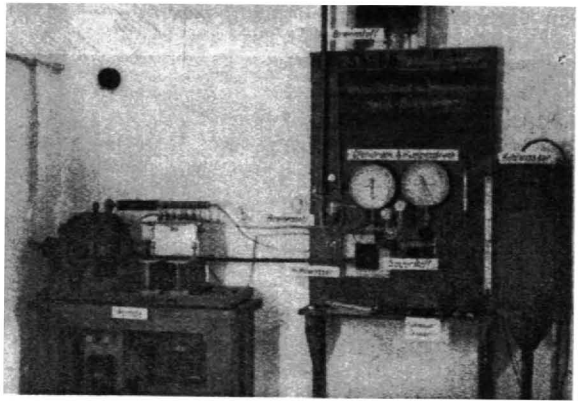

Figure 7.- Instrument room of the test stand for the rocket flight engines.

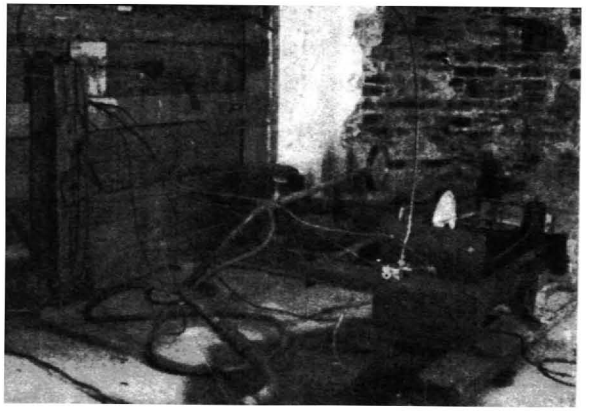

Figure 8.- Brake stand for rocket flight engines.

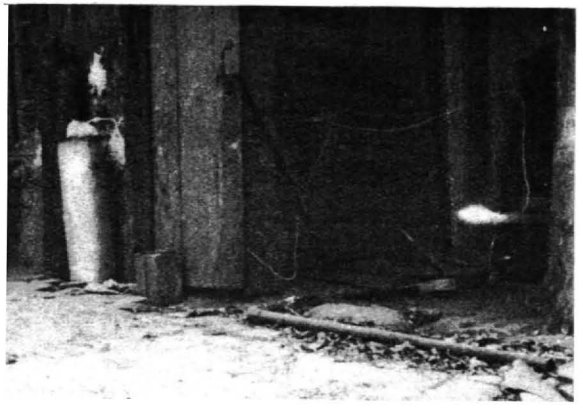

Figure 9.- Introduction of the liquid oxygen by means of a high pressure tank.(left, tank with gaseous oxygen under 150 at. pressure; liquid oxygen pipe;right, liquid oxygen burning with atomized gas oil at the brake stand.

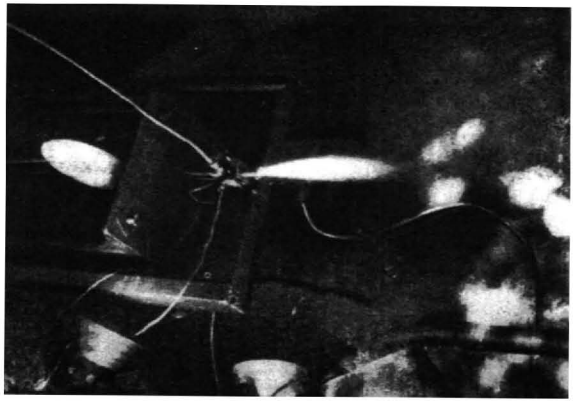

Figure 10.- Model of a rocket motor in operation with 30 kg thrust.

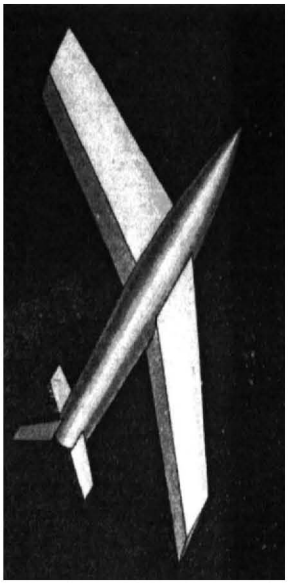

Figure 13.- External appearance of a rocket airplane.

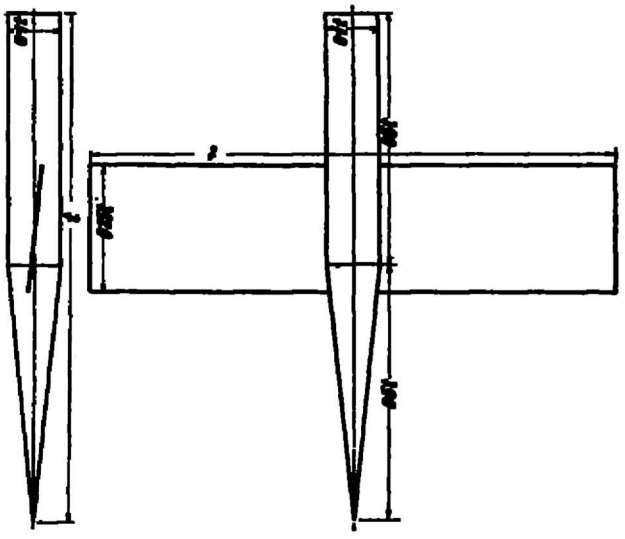

Figure 14.- Sketch of the rocket airplane for the computation of the air forces.

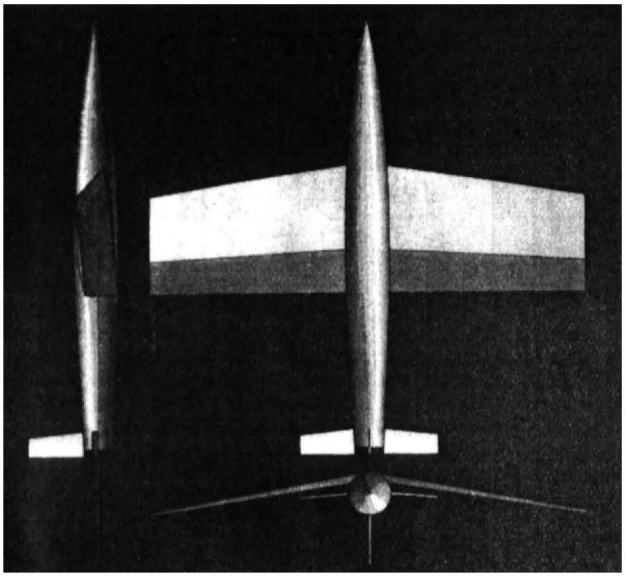

Figure 12.- External appearance of a rocket airplane.

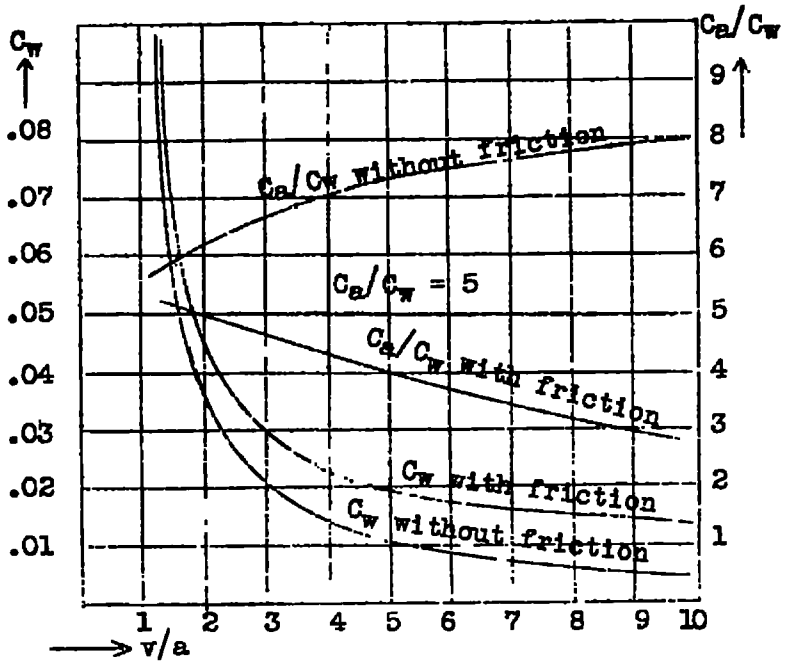

Figure 15.- The air forces on the rocket airplane.

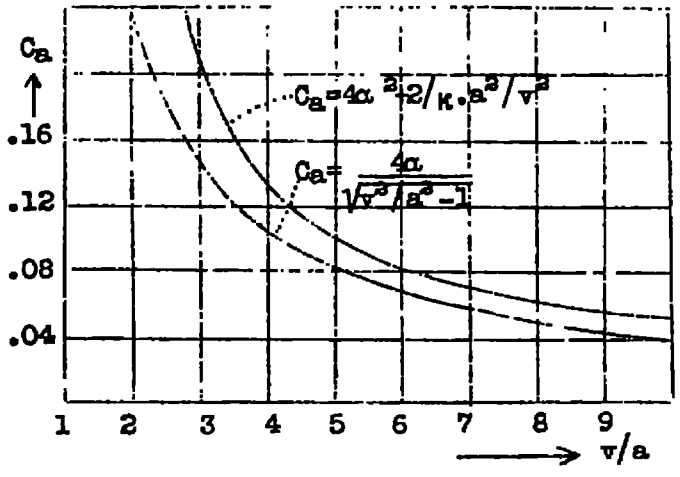

Figure 16.- Lift coefficients according to Ackeret-Busemann and according to the limiting value formula.

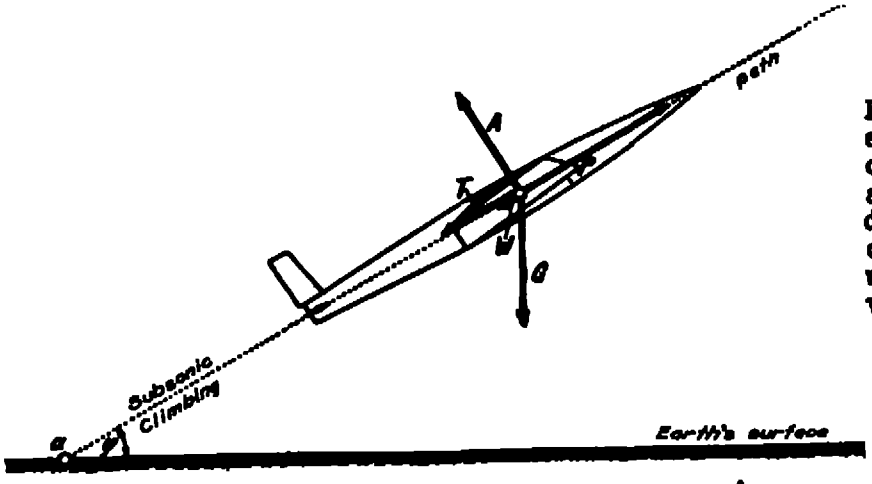

Figure 17.- The external forces on the rocket airplane during a climb path with subsonic velocity.

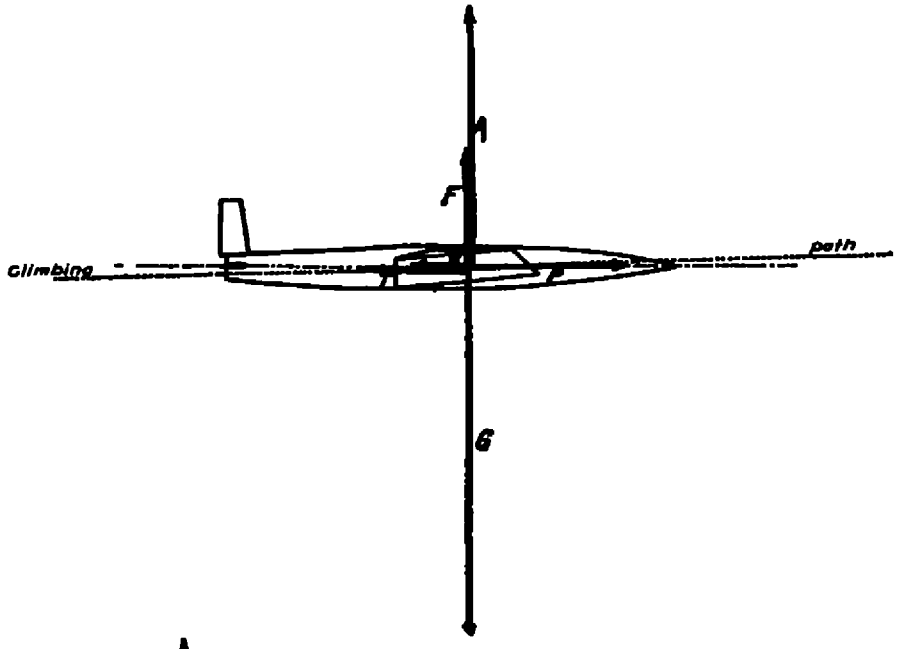

Figure 19.- The external forces on the rocket airplane during a practically suitable supersonic climb path.

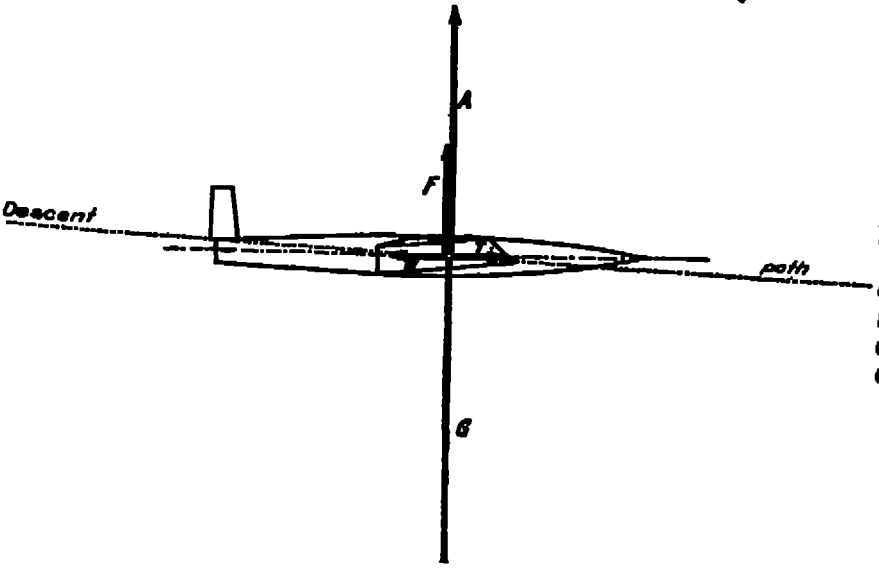

Figure 21.- The external forces on the rocket airplane during the descent path

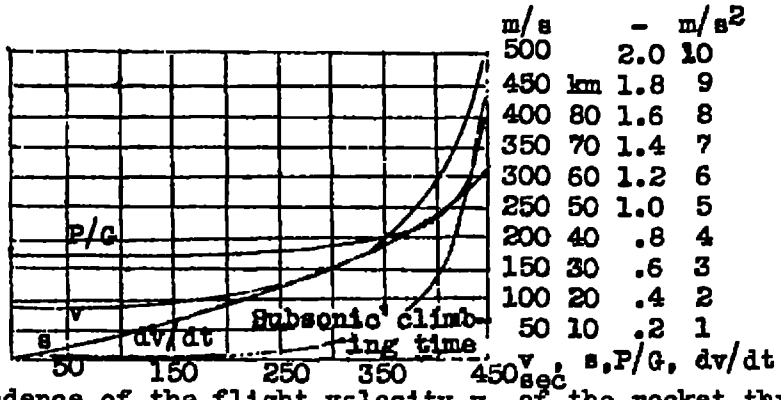

Figure 18.- Dependence of the flight velocity v, of the rocket thrust P/G and of the airplane acceleration dv/dt on the time for climb with subsonic velocities.

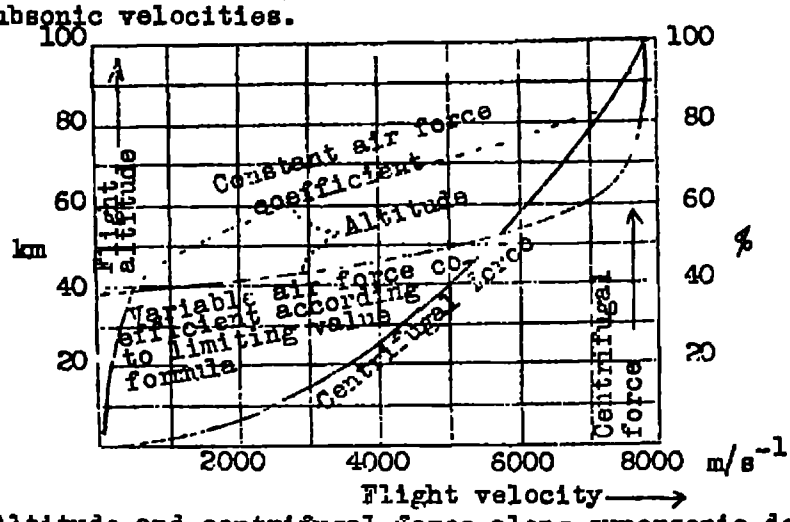

Figure 22.- Altitude and centrifugal force along supersonic descent path as functions of the flight speed.

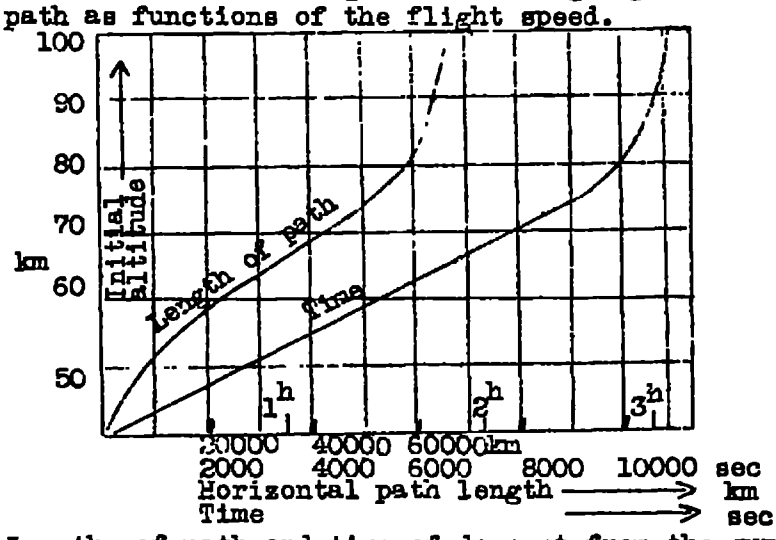

Figure 23.- Lengths of path and time of descent from the supersonic velocity range to the attainment of subsonic velocity.

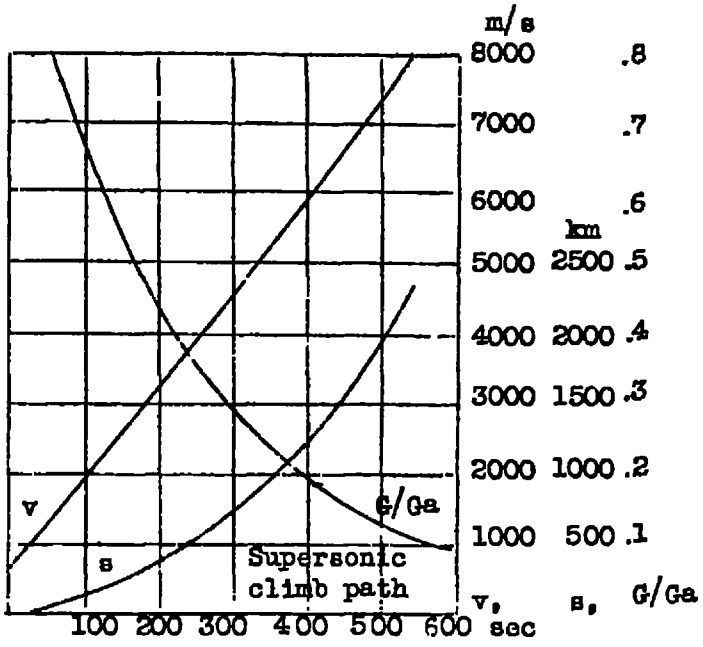

Figure 20.- Dependence of the flight velocity v, supersonic flight distance s and fuel consumption G/Ga on the time for supersonic climb.

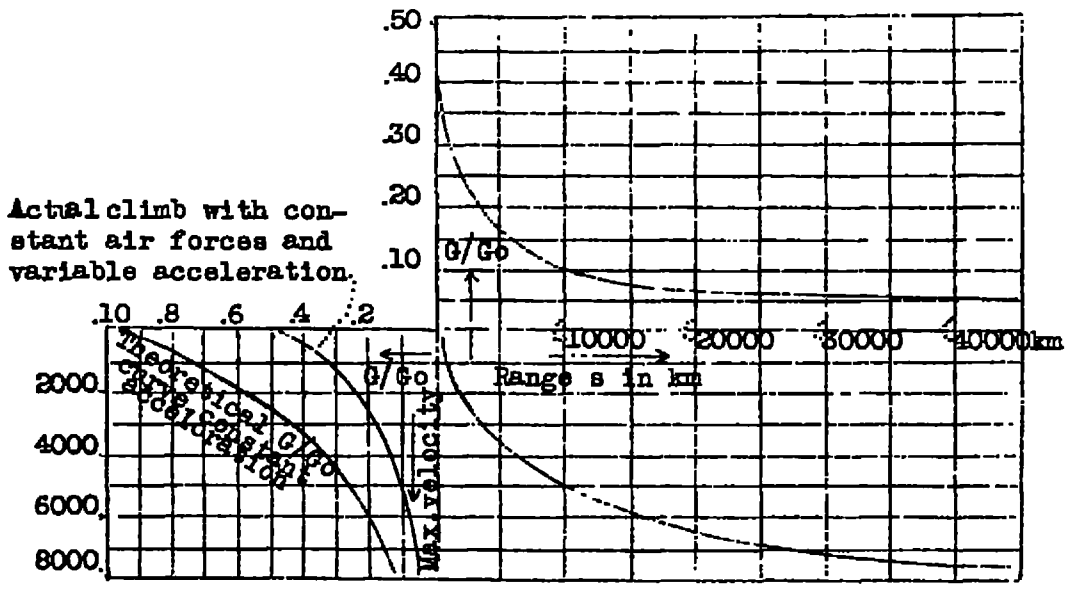

Figure 24.- Relations between load ratio G/Go, distance s and maximum velocity v.